LORIENT

LVH44+LVH44C

INTUMESCENT

FIRE DAMPERS

INTU—
MESCE
FIRE
DAMPE

LORIENT

We've been designing and manufacturing high performance fire dampers for more than 40 years.

Fire and smoke protection measures are essential, life-saving precautions in a building. What's more, they protect the property from the devastating consequences of the fire itself, and the damaging effects of hot and cold smoke. So it's essential to get the product selection right, every time.

Lorient has an international reputation for designing and manufacturing a wide range of innovative sealing solutions for the containment of fire, smoke, sound and energy.

With over 40 years of accumulated knowledge we pride ourselves on offering products that are designed to save lives, preserve property and enhance quality of life.

We recognise our responsibility to create well-designed products that will perform; products which are durable and reliable, and which genuinely improve the buildings they protect. By doing so, we can play our part in improving life safety, amenity and reducing building damage and loss.

INTUMESCENT FIRE DAMPERS

Manufactured for over 25 years, the original Lorient LVH44 Intumescent Fire Damper is the trusted, versatile fire containment solution.

Design needs

Sub-dividing buildings into smaller fire resisting compartments is a recognised method to limit the spread of fire. Building a fire resistant wall or floor to construct an enclosed compartment is relatively simple. However, building design becomes much more complex when the compartments need to be linked for everyday use.

Ventilation through ducting

Designers recognise the need for buildings to be well ventilated for the health and comfort of occupants. Frequent changes of air are required to flush out airborne infections, and warm and cool air needs to be circulated to maintain a comfortable temperature.

Experience has shown that ductwork can, in the event of fire, provide a conduit for fire, as well as the hot smoke and toxic gases it produces.

As HVAC systems frequently penetrate fire compartment boundaries, it is these points that must be treated in an approved manner to preserve the integrity of the fire compartment.

The Lorient solution is to install a LVH44 intumescent fire damper into the duct at the point where it penetrates the fire resistant construction.

This will effectively limit the spread of fire and restrict the passage of hot smoke and toxic gases.

What are intumescent fire dampers and how do they work?

The Lorient LVH44 intumescent fire damper comprises a rigid galvanised steel framework that supports a series of evenly spaced reinforced parallel slats that contain an intumescent material.

Under normal circumstances they allow air to pass freely but a sudden increase in temperature, resulting from the presence of hot flames or gases, will cause the slats to expand to many times their original thickness fusing together to form a stable fire resistant barrier, which restricts fire and limits the spread of hot smoke and toxic gases.

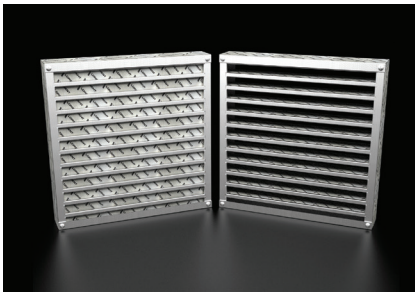

Image: Showing Lorient Damper activated and Lorient Damper normal

AUSTRALIAN MADE

Lorient LVH44 Intumescent Fire Dampers are a recognised and well respected brand. Lorient is proud to continue to offer the LVH44 and LVH44C Intumescent Fire Dampers to the Australian and New Zealand markets.

Australian made

Manufactured in Melbourne to the highest quality, Lorient intumescent fire dampers are designed and approved for use in a host of different applications, providing a range of proven versatile solutions all in accordance with the latest Australian standards – see our system selector for full details.

AUSTRALIAN MADE

Reliability

Lorient intumescent fire dampers offer a rugged, reliable solid state design that unlike conventional mechanical fire dampers do not contain any moving parts.

Their symmetrical construction allows for bi-directional airflow and they are simply activated by a rise in temperature. The LVH44 fire damper produces a tightly sealed, highly insulative intumescent mass that provides a barrier to fire, and also restricts the spread of hot smoke and radiated heat.

Product identification

All Lorient intumescent fire dampers are supplied with Lorient branded foil to allow for easy identification.

LVH44 Insulating Fire Rated Air Transfer Grilles.

LVH44 Fire Rated Air Transfer Grilles

Lorient LVH44 fire rated air transfer grilles provide air transfer between compartments without the need for connecting sheet metal ductwork. They are able to provide both insulating and non-insulating performance depending upon construction requirements.

Lorient LVH44 fire rated air transfer grilles are tested and approved to Section 10 and 11 of AS1530.4 2014 and offer designers, specifiers and mechanical consultants a simple and compliant air transfer solution.

System features include

Lorient intumescent fire dampers offer a rugged, reliable solid state design, that unlike conventional mechanical fire dampers do not contain any moving parts.

Tested and approved in accordance with the very latest standards they offer designers, specifiers and mechanical contractors a simple and compliant fire damper solution.

STANDARDS + REGULATORY REQUIREMENTS

In Australia, building construction is regulated under a framework of provisions detailed within the National Construction Code and associated Building Code of Australia. These codes set out a uniform set of technical provisions that allow for the design and construction of buildings; they also make reference to a number of Australian and International standards to ensure that materials, systems, products and services provide a consistent and quantifiable performance level to ensure the safety of occupants in the event of a fire.

NCC BCA 2025

Section C4D15

This section requires that ventilation and air-conditioning ducts or associated equipment are installed in accordance with AS1668.1 2015.

AS1668.1 2015: The Use of Ventilation & Air Conditioning in Buildings - Part 1: Fire & Smoke Control in Buildings

This recently revised standard sets out the minimum requirements for the design, construction, installation and commissioning of mechanical smoke control systems in buildings and requires that fire dampers – both mechanical and intumescent types are manufactured and installed in accordance with AS1682.1 2015 and AS1682.2 2015. This 2015 version standard now mandates new insulation performance criteria for fire dampers that are not installed in shaft walls or connected to 2m of ductwork. It requires such fire dampers to match the FRL (including insulation) of the walls that they penetrate.

AS1682.1 2015: Fire Dampers: Specification

This standard specifies requirements for the materials, design, manufacture, performance, and labelling of fire dampers. In all cases it requires that fire dampers are tested and approved in accordance with the fire test method detailed in AS1530.4 2014.

AS1682.2 2015: Fire Dampers: Installation

This standard specifies the requirements for the selection, installation and commissioning of fire dampers complying with AS1682.1.

AS1530.4 2014: Fire Resistance Tests on Elements of Construction

This standard provides methods for determining the fire resistance of various elements of construction when subjected to standardised range of fire exposure conditions. Depending upon the fire damper location and installation method the following sections apply.

Section 4: Floors, Roofs, Ceilings & Horizontal Separating Elements

This section sets out the procedures for determining the fire resistance of loadbearing and non-loadbearing incipient rated ceilings and elements penetrating them and is typically used to determine the fire resistance of ceiling mounted fire dampers.

Section 10: Service Penetrations & Control Joints

This section sets out the procedure for determining the fire resistance of elements of construction fitted with Fire Rated Air Transfer Grilles - Not connected to ductwork.

Section 11: Fire Damper & Air Transfer Grille Assemblies in Ducts

This section specifies the procedure for determining the fire resistance of fire dampers and air transfer grilles in ducts that are used to prevent the passage of fire from one fire compartment to another.

Current AS1530.4 Fire Test Methods for dampers and air transfer grilles installed in ducts

Figure 1: Example of a general test arrangement - dampers

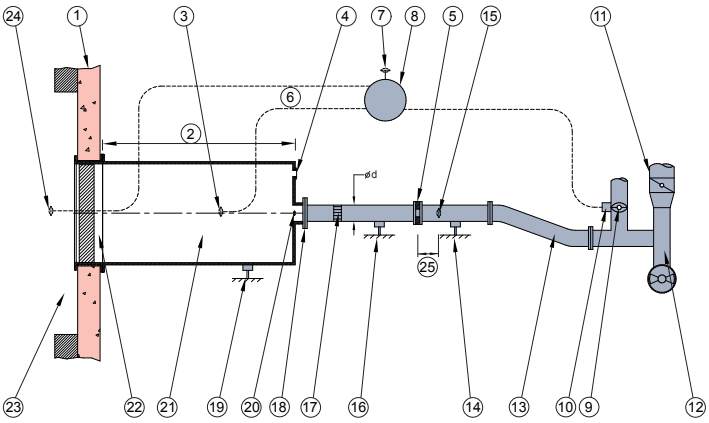

Legend

1. Supporting construction (wall)
2. 2 x diagonal (to a maximum of 2m)
3. Pressure sensor (on centreline)
4. Observation port
5. Orifice plate or venturi
6. Pressure differential (300 Pa)
7. Pressure sensor in laboratory
8. Pressure differential control box
9. Pressure control dilution damper
10. Pneumatic actuator or manual control
11. Balancing damper
12. Fan
13. Flexible connecting duct
14. Support
15. Thermocouple
16. Support
17. Flow straightener
18. Flange
19. Support
20. Thermocouple at exit from connecting duct
21. Connecting duct
22. Test damper
23. Furnace chamber
24. Pressure sensor (on centreline of damper)
25. Distance: thermocouple to orifice = 2d

Maintenance Requirements AS1851 : 2012 Routine Service of Fire Protection Systems & Equipment

This standard sets out requirements for the routine servicing (inspection, testing, preventive maintenance and survey) of fire protection systems and equipment.

Section 13: Fire & Smoke Control Features of Mechanical Services

This section sets out the requirements for routine service of fire and smoke control features of mechanical services in buildings covered by AS/NZS1668.1, AS1682.1, AS1682.2 and for fire dampers it requires that 20% of the fire dampers within a building are inspected annually so that all dampers have been inspected by the end of the fifth year. (Table 13.4.1.4 contained within the standard provides detailed guidance on maintenance and inspection requirements for intumescent fire dampers).

Lorient LVH44 intumescent fire dampers are approved in accordance with the latest fire damper test method detailed in AS1530.4 2014

This stringent new test method is based on a fire test with the additional burden of a negative 300Pa pressure differential applied to the unexposed face of the fire damper during the test period (essentially drawing hot furnace gasses through the fire damper). Failure is now determined when the leakage rate exceeds 360m^3/hr/m^2 (corrected to STP).

Specifiers should ensure that fire dampers are approved in accordance with the latest test requirements rather than relying on data that relates to old superseded test methods.

Image: Lorient LVH intumescent fire damper

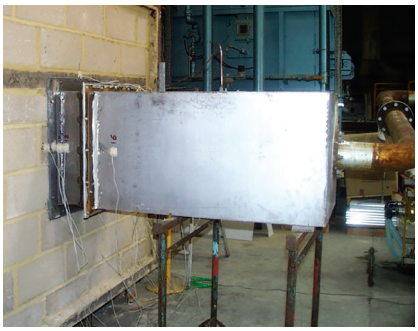

Image: AS1530.4 2014 fire damper testing

LVH44+LVH44C INTUMESCENT FIRE DAMPER AIR FLOW & ACOUSTIC PERFORMANCE DATA

LVH44, LVH44C + LVH-D ACOUSTIC, AIRFLOW AND PRESSURE LOSS CHARACTERISTICS

Knowing the pressure drop through a fire damper is a critical consideration when designing a new system or upgrading an existing layout. It is therefore critical that accurate information is available to the designer.

Lorient sponsored and undertook extensive independent testing at the Noise Control Research Laboratories (NCRL) in accordance with the following standards:

ISO 5221: 1984

Air distribution and air diffusion – Rules to methods of measuring air flow rate in an air handling duct.

IS EN 1751: 2014

Ventilation for buildings. Air terminal devices. Aerodynamic testing of dampers and valves.

ISO 5135: 2020

Acoustics. Determination of sound power levels of noise from air-terminal units, dampers and valves.

ISO3741 :2010

Acoustics – Determination of sound power levels of noise sources using sound pressure.

NCRL test report BF2001-SP 22/06/00 outlines the pressure loss and acoustic characteristics of Lorient LVH44 intumescent fire dampers. Test data has been summarised and presented in various nomograms to allow engineers to make accurate informed decisions that allow specification of the correct product at the optimum size.

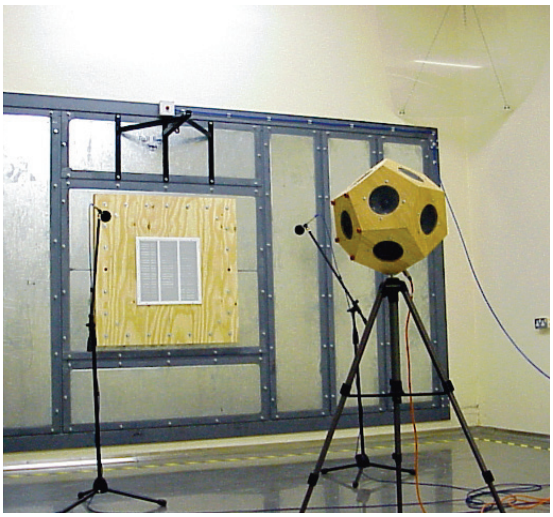

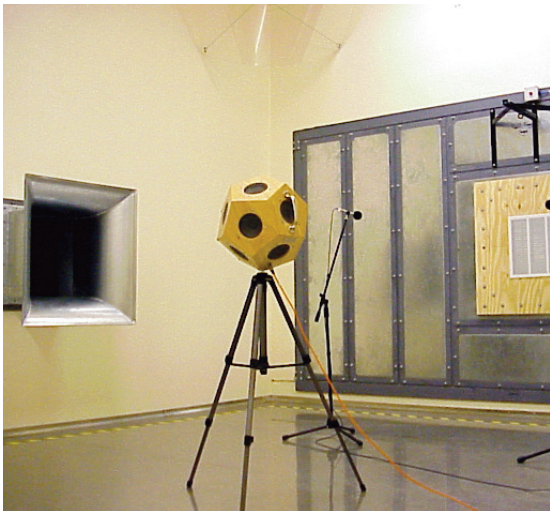

Images: NCRL Acoustic and pressure loss test

LORIENT INTUMESCENT FIRE DAMPER SELECTION NOMOGRAM FOR DETERMINING PRESSURE, FLOW AND ACOUSTIC CHARACTERISTICS

Guide on how to use the Lorient Nomogram Tool

LVH44 INTUMESCENT FIRE DAMPER SELECTION NOMOGRAM PRESSURE, FLOW & ACOUSTIC DATA

TABLE 1

Obtaining pressure loss and acoustic information for a Lorient LVH44 of a known size

Draw a line to connect the width and height dimensions of the damper (Line 1).

Select the desired system airflow rate value and connect this to the point where Line 1 intersects the Pivot Line (Line 2). Pressure loss and acoustic sound power levels can now be read off the two scales.

TABLE 2

Selecting an appropriate size Lorient LVH44 when system pressure drops and airflow rates are known

Draw a line between the known flow rate and pressure loss values and extend this to the pivot line (Line 3). A line can now be drawn through this pivot line intersection (Line 4) and rotated to choose an appropriate damper height and width.

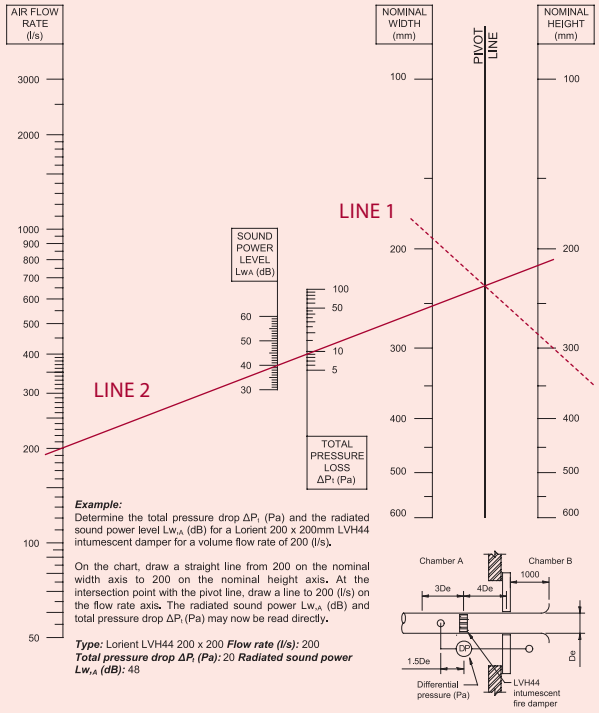

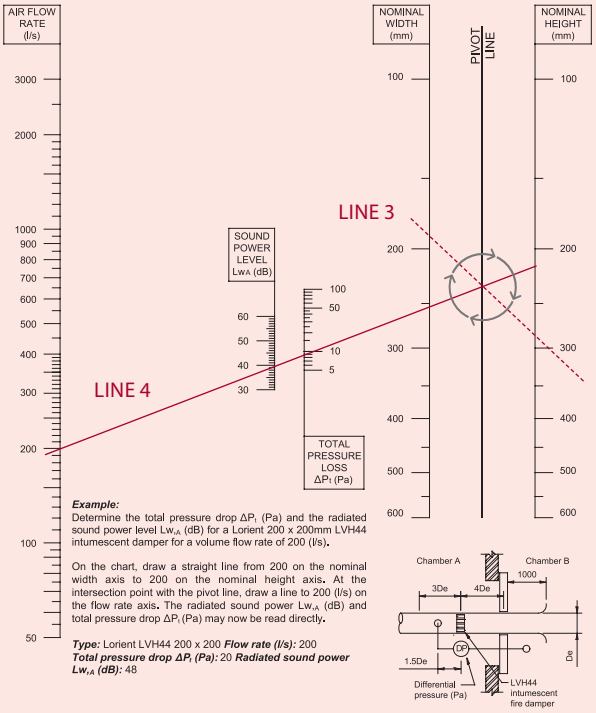

- Note: Nomogram information based on Lorient sponsored test: NCRL report BF2001-SP 22/06/00

LORIENT LVH44 INTUMESCENT FIRE DAMPERS SELECTION NOMOGRAM FOR DETERMINING PRESSURE, FLOW AND ACOUSTIC CHARACTERISTICS

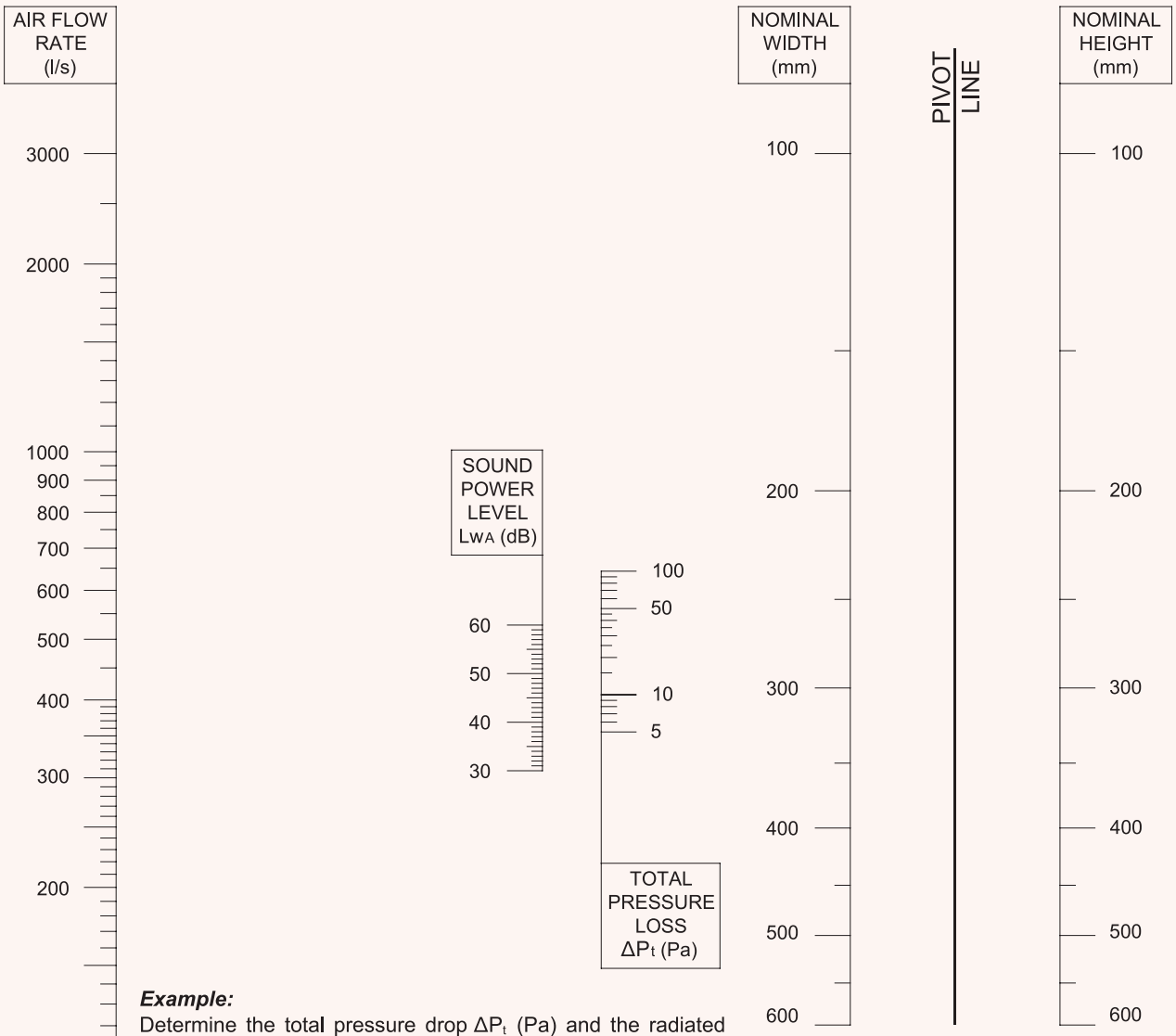

Example:
Determine the total pressure drop ΔP_t (Pa) and the radiated sound power level $Lw_{,A}$ (dB) for a Lorient 200 x 200mm LVH44 intumescent damper for a volume flow rate of 200 (l/s).

On the chart, draw a straight line from 200 on the nominal width axis to 200 on the nominal height axis. At the intersection point with the pivot line, draw a line to 200 (l/s) on the flow rate axis. The radiated sound power $Lw_{,A}$ (dB) and total pressure drop ΔP_t (Pa) may now be read directly.

Type: Lorient LVH44 200 x 200 ***Flow rate (l/s):*** 200
Total pressure drop ΔP_t (Pa): 20 ***Radiated sound power $Lw_{,A}$ (dB):*** 48

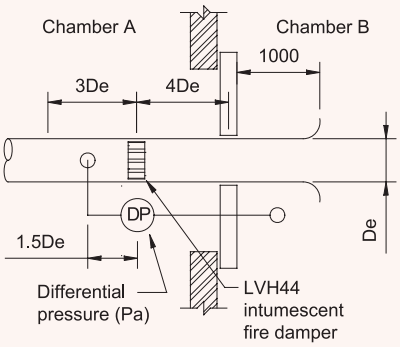

Note: Nomogram information based on Lorient sponsored test: NCRL report BF2001-SP 22/06/00

LORIENT LVH44C INTUMESCENT FIRE DAMPERS SELECTION NOMOGRAM FOR DETERMINING PRESSURE, FLOW AND ACOUSTIC CHARACTERISTICS

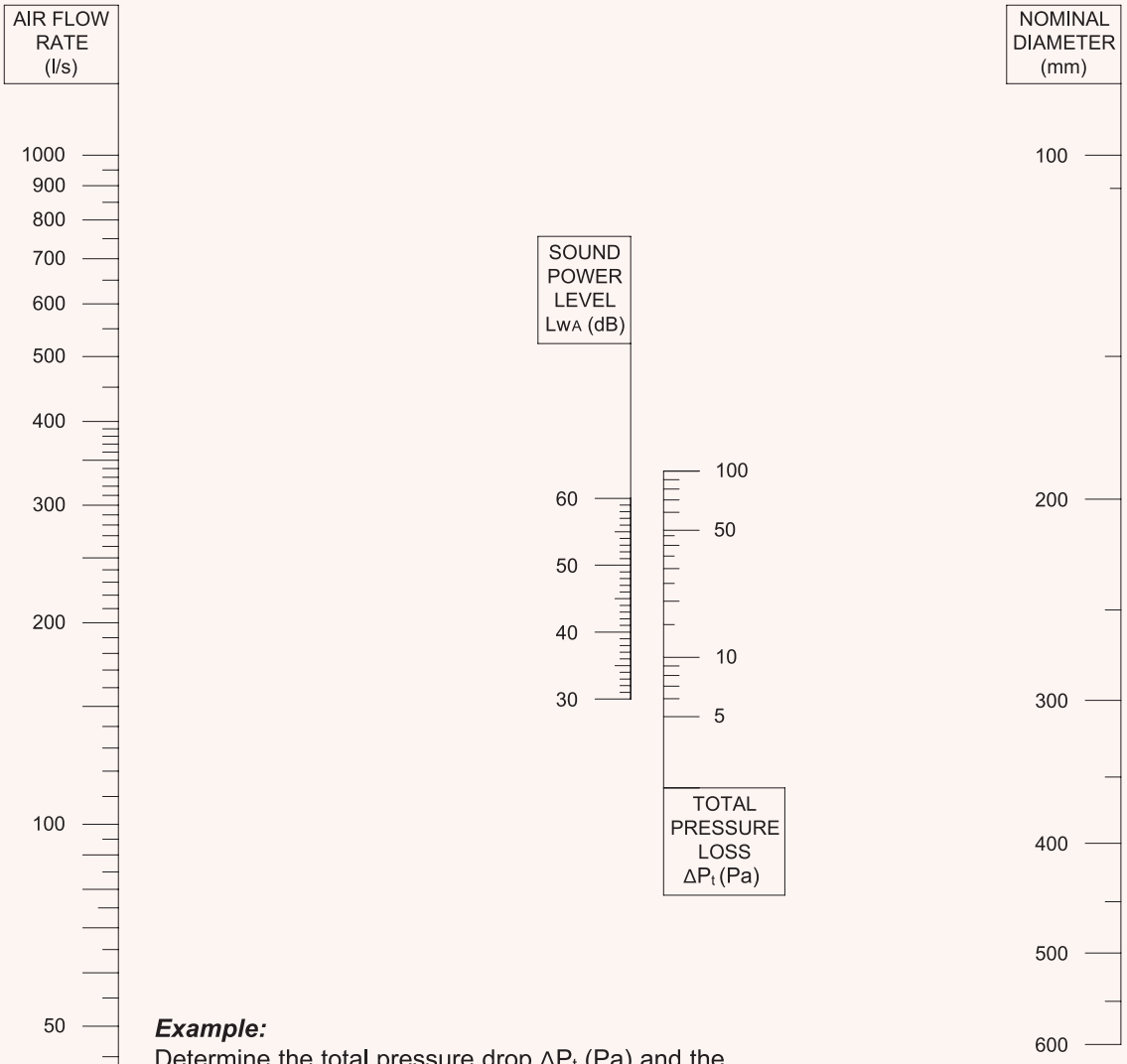

Example:
Determine the total pressure drop ΔP_t (Pa) and the radiated sound power level $Lw_{,A}$ (dB) for a Lorient 250 ∅ LVH44C intumescent damper for a volume flow rate of 300 (l/s).

On the chart, draw a straight line from 250 ∅ on the nominal diameter axis to 300 (l/s) on the flow rate axis. The radiated sound power $Lw_{,A}$ (dB) and total pressure drop ΔP_t (Pa) may now be read directly.

Type: Lorient LVH44C 250 ∅
Flow rate (l/s): 300
Total pressure drop ΔP_t (Pa): 33
Radiated sound power $Lw_{,A}$ (dB): 51

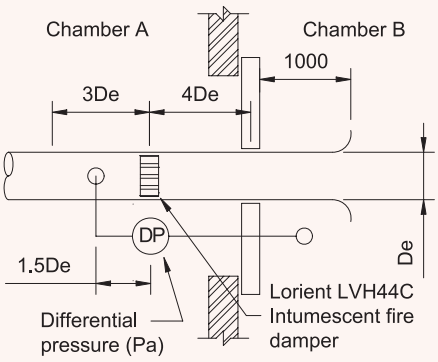

▸ Note: Nomogram information based on Lorient sponsored test: NCRL report BF2001-SP 22/06/00

LORIENT LVH INTUMESCENT DOOR GRILLE NOMOGRAM FOR DETERMINING PRESSURE LOSS AND ACOUSTIC CHARACTERISTICS

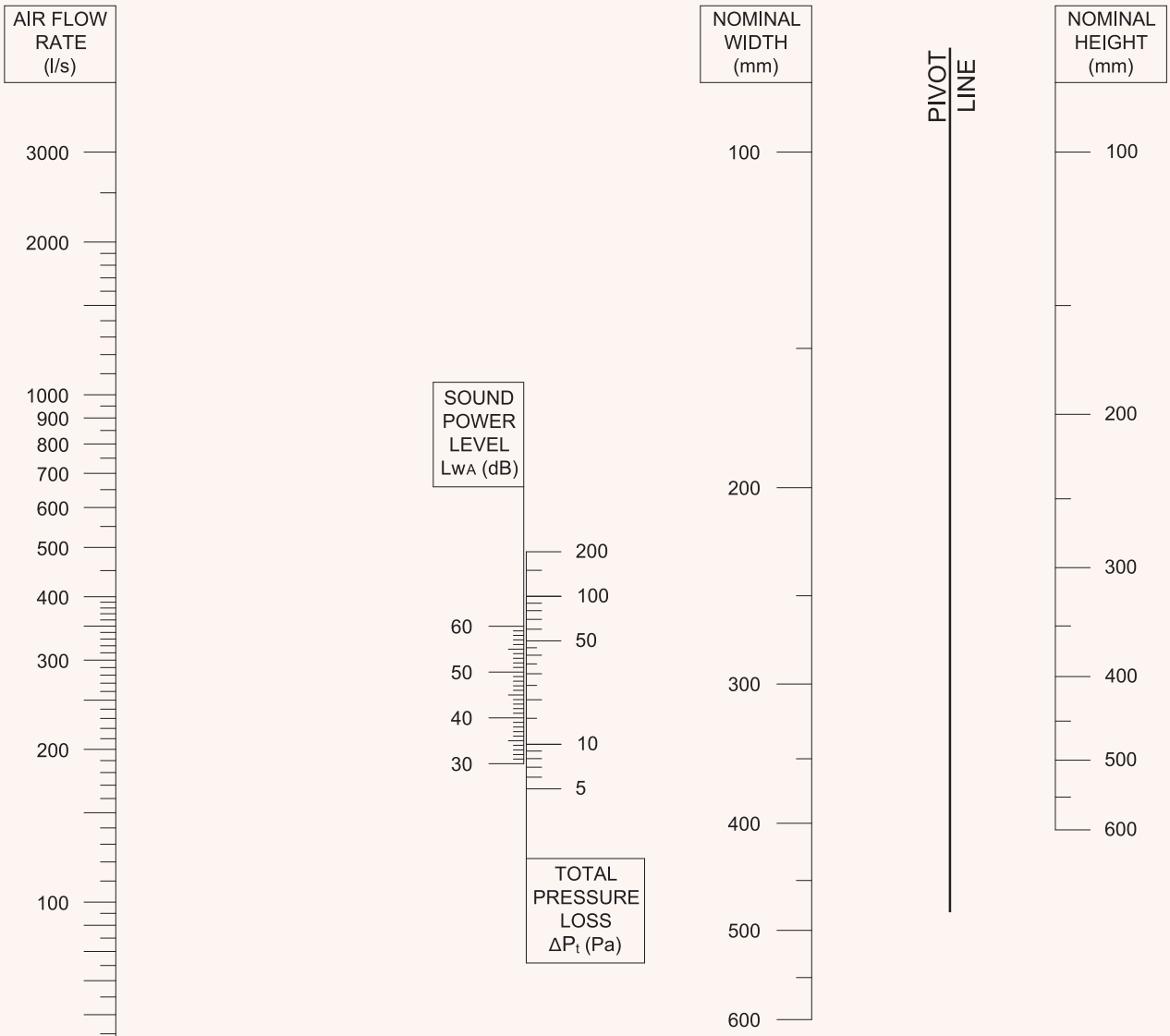

Example:
Determine the total pressure drop ΔP_t (Pa) and the radiated sound power level $Lw,_A$ (dB) for a 450 x 450mm Lorient LVH Door grille for a volume flow rate of 500 (l/s).

On the chart, draw a straight line from 450 on the nominal width axis to 450 on the nominal height axis. At the intersection point with the pivot line, draw a line to 500 (l/s) on the flow rate axis. The radiated sound power $Lw,_A$ (dB) and total pressure drop ΔP_t (Pa) may now be read directly.

Type: Lorient LVH Door grille 450 x 450 ***Flow rate (l/s): 500 Total pressure drop ΔP_t (Pa): 35 Radiated sound power $Lw,_A$ (dB): 52***

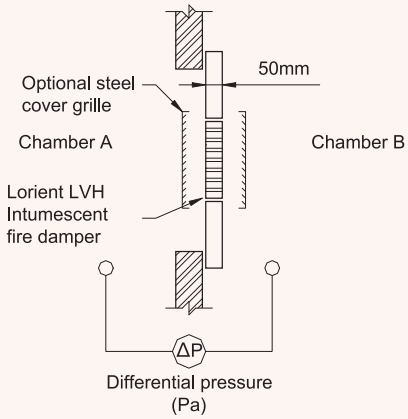

Note: Nomogram information based on Lorient sponsored test: NCRL report BF2001-SP 22/06/00

FREE AREA CHARACTERISTIC

LVH44	MM	CM	M	% FREE AREA
100 X 100	4,240mm²	42.4cm²	0.0042m²	42.40%
150 X 150	10,800mm²	108cm²	0.0108m²	48%
200 X 200	22,520mm²	225.5cm²	0.0225m²	56.30%
250 X 250	35,438mm²	354cm²	0.0354m²	56.70%
300 X 300	54,900mm²	549.8cm²	0.0549m²	61%
350 X 350	73,872mm²	738cm²	0.073m²	61%
400 X 400	98,240mm²	982.3cm²	0.0982m²	61.40%
450 X 300	80,562mm²	805cm²	0.0805m²	59.6%
450 X 450	121,095mm²	1,211cm²	0.121m²	59.80%
500 X 500	157,750mm²	1,578cm²	0.157m²	63.10%
550 X 250	71,148mm²	711cm²	0.071m²	56.9%
550 X 550	188,416mm²	1,884cm²	0.1884m²	62.28%
600 X 600	231,660mm²	2,316cm²	0.231m²	64.35%

LVH44C	MM	CM	M	% FREE AREA
LVHC 98Ø	2,967mm²	29.6cm²	0.0029m²	39.34%
LVHC 148Ø	8,527mm²	85.2cm²	0.0085m²	52.36%
LVHC 200Ø	16,766mm²	167cm²	0.0167m²	53.36%
LVHC 248Ø	27,532mm²	275.3cm²	0.0275m²	56.9%
LVHC 300Ø	41,275mm²	412cm²	0.0412m²	59.7%
LVHC 350Ø	55,732mm²	557cm²	0.00557m²	58.59%
LVHC 450Ø	74,520mm²	745cm²	0.00745m²	47.27%
LVHC 498Ø	97,876mm²	978.7cm²	0.0978m²	50.25%

COVER GRILLES	MM	CM	M	% FREE AREA
100 X 100	6,300mm²	63cm²	0.0063m²	63%
150 X 150	15,187mm²	152cm²	0.0152m²	67.50%
200 X 200	26,200mm²	262cm²	0.0262m²	65.50%
250 X 250	42,375mm²	424cm²	0.0424m²	67.80%
300 X 300	62,550mm²	626cm²	0.0625m²	69.50%
400 X 400	103,040mm²	1,031cm²	0.103m²	64.4%
450 X 450	142,155mm²	1,422cm²	0.142m²	70.20%
500 X 500	172,500mm²	1,726cm²	0.172m²	69%
600 X 600	253,800mm²	2,539cm²	0.254m²	70.50%

LORIENT INTUMESCENT SEALANT

Lorient intumescent sealant is an integral part of Lorient's approved intumescent fire damper systems.

It is used to seal the fire damper perimeter and also provide fire stopping between the damper casing and the penetrated element (as shown in our system installation details).

When exposed to fire, Lorient intumescent sealant expands in volume to fill cavities and provides a stable barrier to restrict the spread of fire and hot gases.

KEY BENEFITS

- Use to ensure compliance with Lorient's approved installation methods.
- Approved for use and tested to AS1530.4 2014.
- Provides effective acoustic containment.
- Specially formulated for adhesion to a wide range of materials including wood, metal, concrete, masonry and plasterboard materials.
- Flexible – it tolerates differential movement in everyday service.
- Water based for easy clean up.
- Easily applied with conventional sealant applicators.
- It can be neatly injected into otherwise inaccessible areas.
- Smooth gunnability and tool off finish.
- Lorient sealant have a shelf life of 18 months (from manufacture), when unopened in container.
- Only approved sealant for use with Lorient Intumescent dampers.

AVAILABILITY

- Supplied as 310cc cartridges in box quantities of 25 units in white or grey.
- Available in 600ml sausages in grey.

FIRE DAMPER COVER GRILLES

These cover grilles come with a decorative and protective silver powdercoat finish – they are face fixed to walls or doors to provide an aesthetic appearance to rectangular and circular intumescent fire dampers.

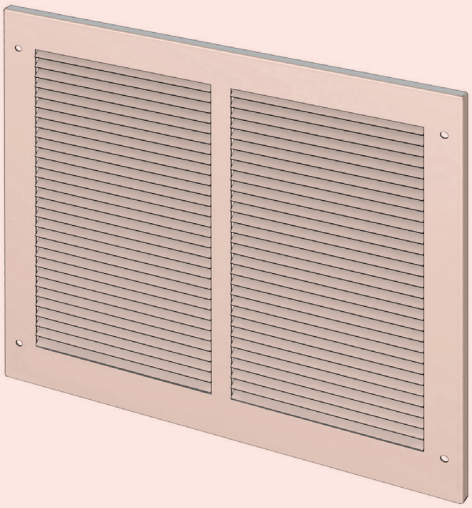

Lorient LVH cover grilles are available in the following nominal sizes (AxB):

Product code	Cover grille (overall) outside dimensions	To suit Lorient LVH damper size	Free area
SPFDK/350X350COV/SIL	350 x 350mm	300 x 300mm	67%
SPFDK/500X500COV/SIL	500 x 500mm	450 x 450mm	67%
SPFDK/650X350COV/SIL	650 x 350mm	600 x 300mm	67%
SPFDK/650X650COV/SIL	650 x 650mm	600 x 600mm	67%

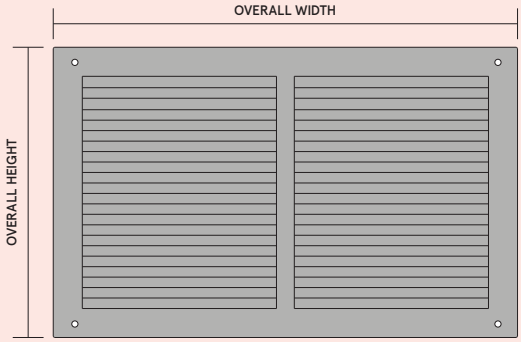

Minimum quantities apply.

Lorient cover grilles are designed for internal use only and supplied with a powdercoat finish.

If intended for exterior use they must be treated with an appropriate weather proof finish (supplied by others).

Lorient cover grille and damper are not suitable for high corrosive environment

WALL 1

FIRE RATED MASONRY / CONCRETE WALL SYSTEM

	DESCRIPTION
1	Masonry or concrete wall (minimum 75mm or thicker in accordance to AS3600 or AS3700 to achieve required FRL)
2	0.6mm (min) Z275 galvanised steel angles to all four sides. Angle dimensions shall be continuous and at least 2 x the dimension of the gap between the damper casing and the penetrated element.
3	Each angle fixed to damper casing with minimum 8g x 15mm steel self-drilling screw at 100mm centres or at least 2 per side.
4	Z275 galvanised steel casing minimum thickness 0.6mm.
5	Lorient LVH44 intumescent fire damper screw fixed into casing.
6	Casing terminates with breakaway joints, as per AS1682.2.
7	Fire damper perimeter sealed with Lorient intumescent sealant.
8	LVH44 fixed to casing with 2 x 8g x 25mm self drilling screw on all 4 sides at 100mm centres.
9	Gap between casing and aperture filled with Lorient intumescent sealant. Backing rod used as required to control sealant fill depth to at least 25mm. Maximum annular gap between casing and wall 25mm.

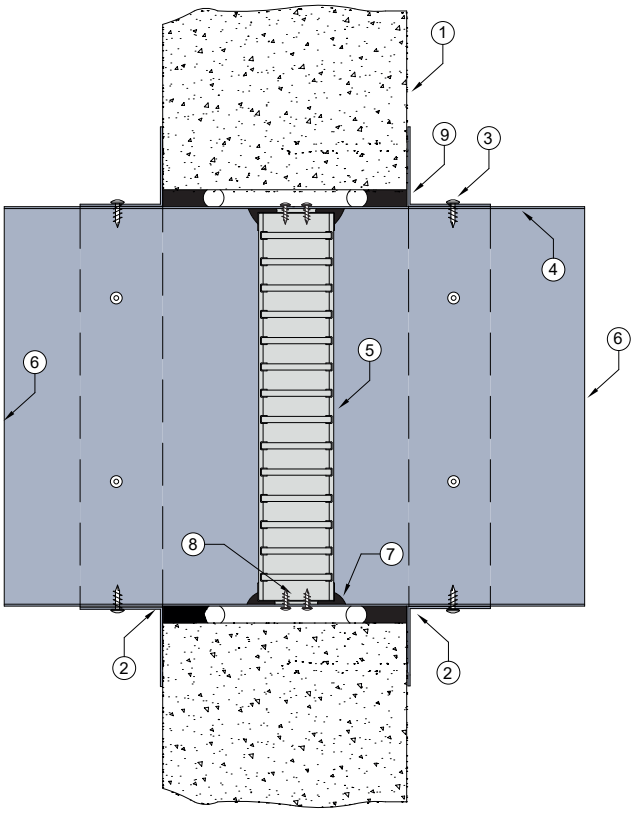

LVH44 in steel casing penetrating fire rated Masonry / Concrete wall

FRL -/120/30 (up to 1200mm x 600mm)

Fire Resistance in accordance with	Fire Resistance in accordance with
AS1530.4 2014	AS1530.4 2014
Approval Ref	**Approval Ref**
EXOVA EWFA 33233400	EXOVA EWFA 33233400
Max single cell size	**Max modular size**
600mm x 600mm	600mm x 1200mm / 1200mm x 600mm

INSTALLATION INSTRUCTIONS

- Prepare the wall opening to accept the fire damper and install in wall, as shown in system detail.
- Centralise the casing and firestop the gap between the casing and wall with Lorient intumescent sealant, note fill details in point 9.
- Perimeter angles are mechanically fixed to casing with steel self drilling screws or pop rivets, as detailed in points 2 & 3.
- Ductwork shall be connected with breakaway joints, as per point 6.
- Ensure product identification labels are conspicuously positioned for easy identification.
- Ensure convenient access is provided to allow for AS1851 inspection and maintenance routines.
- Note: Damper casings, angles and fixings supplied by others.

WALL 2

FIRE RATED MASONRY / CONCRETE WALL SYSTEM

	DESCRIPTION
1	Masonry or concrete wall (minimum 75mm or thicker in accordance to AS3600 or AS3700 to achieve required FRL)
2	Angles fixed to wall with minimum dia 6.5mm x 35mm expanding masonry anchor (e.g dynabolt) or M6 x 30mm masonry hex screw bolt/anchor at 150mm centres or at least 2 per side.
3	0.6mm (min) Z275 galvanised steel angles to all four sides. Angle dimensions shall be continuous and at least 2 x the dimension of the gap between the damper casing and the penetrated element. Each angle fixed to damper casing with minimum 8g x 15mm steel self-drilling screw at 100mm centres or at least 2 per side.
4	Z275 galvanised steel casing minimum thickness 0.6mm.
5	Lorient LVH44 intumescent fire damper screw fixed into casing.
6	Casing terminates with breakaway joints, as per AS1682.2.
7	Fire damper perimeter sealed with Lorient intumescent sealant.
8	LVH44 fixed to casing with 2 x 8g x 25mm self drilling screw on all 4 sides at 100mm centres.
9	Gap between casing and aperture filled with Lorient intumescent sealant. Backing rod used as required to control sealant fill depth to at least 50mm. Maximum annular gap between casing and wall 25mm.

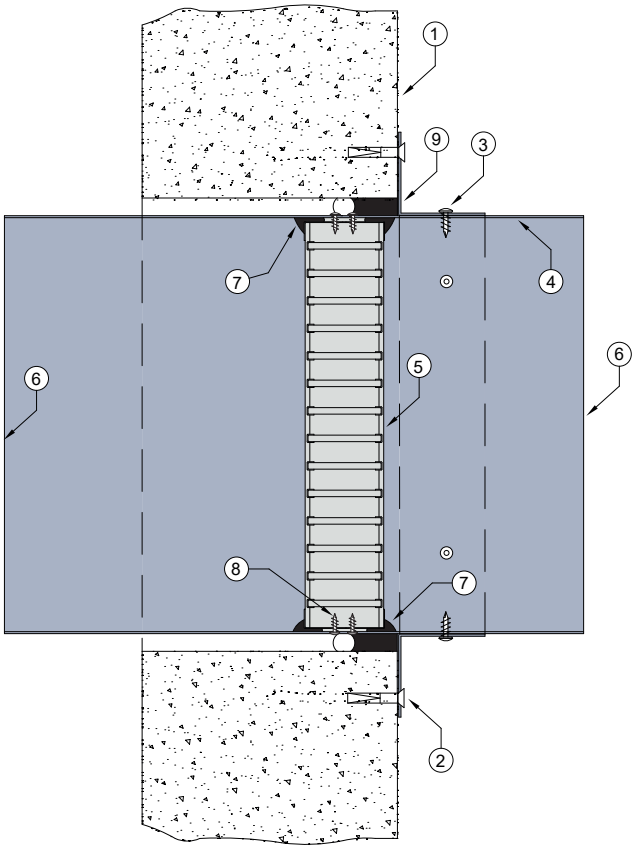

LVH44 in steel casing penetrating fire rated Masonry / Concrete wall

FRL -/120/30 (up to 1200mm x 600mm)

Fire Resistance in accordance with	Fire Resistance in accordance with
AS1530.4 2014	AS1530.4 2014
Approval Ref	**Approval Ref**
EXOVA EWFA 33233400	EXOVA EWFA 33233400
Max single cell size	**Max modular size**
600mm x 600mm	600mm x 1200mm / 1200mm x 600mm

INSTALLATION INSTRUCTIONS

- Prepare the wall opening to accept the fire damper and install in wall, as shown in system detail.
- Centralise the casing and firestop the gap between the casing and wall with Lorient intumescent sealant, note fill details in point 9.
- Perimeter angles are mechanically fixed to casing with steel self drilling screws or pop rivets and to wall with steel masonry anchors, as detailed in points 2 & 3.
- Ductwork shall be connected with breakaway joints, as per point 6.
- Ensure product identification labels are conspicuously positioned for easy identification.
- Ensure convenient access is provided to allow for AS1851 inspection and maintenance routines.
- Note: Damper casings, angles and fixings supplied by others.

WALL 3 DUCT WITH GRILLE

FIRE RATED MASONRY / CONCRETE WALL SYSTEM

	DESCRIPTION
1	Masonry or concrete wall: (minimum 75mm or thicker in accordance to AS3600 or AS3700 to achieve required FRL)
2	Angles fixed to wall with minimum dia 6.5mm x 35mm expanding masonry anchor (e.g dynabolt) or M6 x 30mm masonry hex screw bolt/anchor at 150mm centres or at least 2 per side.
3	0.6mm (min) Z275 galvanised steel angles to all four sides. Angle dimensions shall be continuous and at least 2 x the dimension of the gap between the damper casing and the penetrated element. Each angle fixed to damper casing with minimum 8g x 15mm steel self-drilling screw at 100mm centres or at least 2 per side.
4	Z275 galvanised steel casing minimum thickness 0.6mm.
5	Lorient LVH44 fixed to casing with 2 x 8g x 25mm self drilling screw on all 4 sides at 100mm centres.
6	Casing either turned out or fitted with angles to all four sides fixed in place with 8g x 25mm self drilling screw. 100mm centre or at least 2 per side
7	Fire damper perimeter sealed with Lorient intumescent sealant.
8	LVH44 fixed to casing with 2 x 8g x 25mm self drilling screw on all 4 sides at 100mm centres.
9	Gap between casing and aperture filled with Lorient intumescent sealant. Backing rod used as required to control sealant fill depth to at least 25mm. Maximum annular gap between casing and wall 25mm.
10	Cover grille (by others) screw fixed in place to cover aperture.
11	Breakaway joint as per AS1682.2 as required.

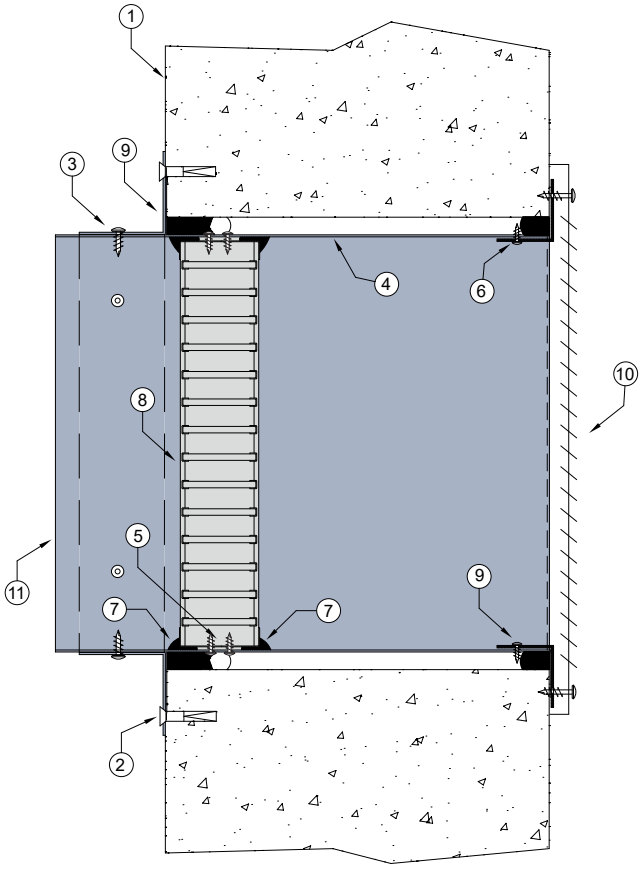

LVH44 in steel casing penetrating fire rated Masonry / Concrete wall

FRL -/120/30 (up to 1200mm x 600mm)

Fire Resistance in accordance with

AS1530.4 2014

Approval Ref

EXOVA EWFA 33233400

Max single cell size

600mm x 600mm

Max modular size

600mm x 1200mm / 1200mm x 600mm

INSTALLATION INSTRUCTIONS

- Prepare the wall opening to accept the fire damper and install in wall, as shown in system detail.
- Centralise the casing and firestop the gap between the casing and wall with Lorient intumescent sealant, note fill details in point 9.
- Perimeter angles are mechanically fixed to casing with steel self drilling screws or pop rivets and to wall with steel expanding masonry anchor/bolt anchors, as detailed in points 2 & 3.
- Ductwork shall be connected with breakaway joints, as per point 6.
- Ensure product identification labels are conspicuously positioned for easy identification.
- Ensure convenient access is provided to allow for AS1851 inspection and maintenance routines.
- Note: Damper casings, angles and fixings supplied by others.

WALL 4 DUCT TIGHT TO SLAB

FIRE RATED MASONRY / CONCRETE WALL SYSTEM

	DESCRIPTION
1	Masonry or concrete wall (minimum 75mm or thicker in accordance to AS3600 or AS3700 to achieve required FRL).
2	Concrete floor slab.
3	100mm wide x min 25mm think non-combustible (with FRL -/120/120) or 100mm x 50mm thick TBA Firefly Intubatt bedded in minimum 1mm layer of intumescent sealant and running full width of the aperture. Block mechanically fixed to slab with expanding steel anchors (e.g Dynabolt or similar).
4	Z275 galvanised steel damper casing 0.6mm minimum thickness.
5	Lorient LVH44 intumescent fire damper.
6	Casing terminates with breakaway joints, as per AS1682.2.
7	Fire damper perimeter sealed with Lorient intumescent sealant.
8	LVH44 fixed to casing with 2 x 8g x 25mm self drilling screw on all 4 sides at 100mm centres.
9	Gap between casing and aperture filled with Lorient intumescent sealant. Backing rod used as required to control sealant fill depth to at least 50mm. Maximum annular gap between casing and wall 25mm.
10	Angles fixed to wall with minimum dia 6.5mm x 35mm expanding masonry anchor (e.g dynabolt) or M6 x 30mm masonry hex screw bolt/anchor at 150mm centres or at least 2 per side.
11	0.6mm (min) Z275 galvanised steel angles to all 3 sides of wall (bottom and sides). Angle dimension shall be continuous and at least 2 x the dimension of the gap between damper casing and the penetrated element. Each angle fixed to damper casing with minimum 8g x 15mm steel self-drilling screw at 100mm centres or at least 2 per side.

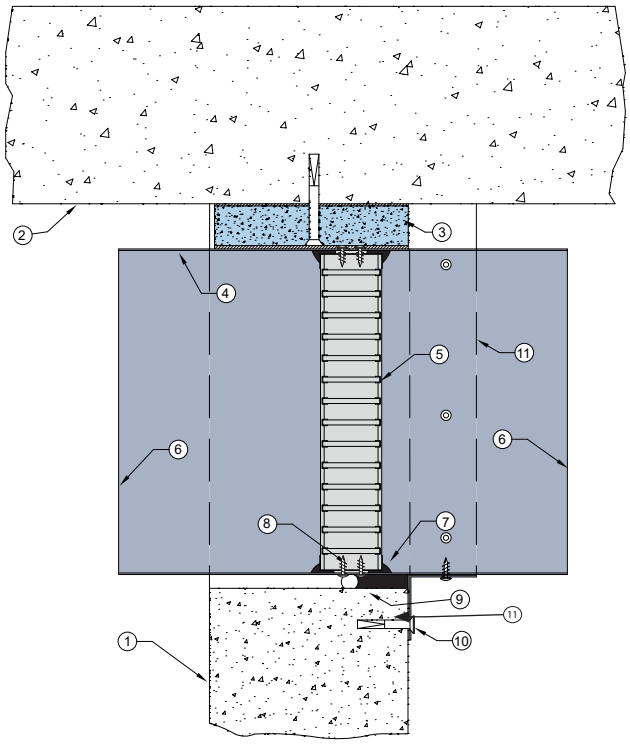

LVH44 in steel casing penetrating fire rated Masonry / Concrete wall

FRL -/120/30 (up to 1200mm x 600mm)

Fire Resistance in accordance with

AS1530.4 2014

Approval Ref

EXOVA EWFA 33233400

Max single cell size

600mm x 600mm

Max modular size

600mm x 1200mm / 1200mm x 600mm

INSTALLATION INSTRUCTIONS

- Prepare the wall opening to accept the fire damper and install in wall, as shown in system detail.
- Non-combustible block is fixed to slab, as per point 3.
- Lorient intumescent sealant liberally applied to block and duct containing damper is positioned and pushed up tight to packing block.
- Firestop the gap between the casing and wall with Lorient intumescent sealant, note fill details in point 9.
- 3 off perimeter angles are mechanically fixed to casing with steel self drilling screws or pop rivets and fixed to wall with steel expanding masonry anchor, as detailed in point 10.
- Ductwork shall be connected with breakaway joints, as per point 6.
- Ensure product identification labels are conspicuously positioned for easy identification.
- Ensure convenient access is provided to allow for AS1851 inspection and maintenance routines.
- Note: Damper casings, angles and fixings supplied by others.

WALL 5 DUCT TIGHT TO WALL

FIRE RATED MASONRY / CONCRETE WALL SYSTEM

	DESCRIPTION
1	Masonry or concrete wall (minimum 75mm or thicker in accordance to AS3600 or AS3700 to achieve required FRL).
2	Adjacent masonry or concrete wall.
3	100mm wide x min 25mm think non-combustible (with FRL -/120/120) or 100mm x 50mm thick TBA Firefly Intubatt bedded in minimum 1mm layer of intumescent sealant and running full width of the aperture. Block mechanically fixed to wall with expanding steel anchors (e.g Dynabolt or similar).
4	Z275 galvanised steel damper casing 0.6mm minimum thickness.
5	Lorient LVH44 intumescent fire damper.
6	Casing terminates with breakaway joints, as per AS1682.2.
7	Fire damper perimeter sealed with Lorient intumescent sealant.
8	LVH44 fixed to casing with 2 x 8g x 25mm self drilling screw on all 4 sides at 100mm centres.
9	Gap between casing and aperture filled with Lorient intumescent sealant. Backing rod used as required to control sealant fill depth to at least 50mm. Maximum annular gap between casing and wall 25mm.
10	Angles fixed to slab with minimum dia 6.5mm x 35mm expanding masonry anchor (e.g dynabolt) or M6 x 30mm masonry hex screw bolt/anchor at 150mm centres or at least 2 per side.
11	0.6mm (min) Z275 galvanised steel angles to all 3 sides of wall (bottom and sides). Angle dimension shall be continuous and at least 2 x the dimension of the gap between damper casing and the penetrated element. Each angle fixed to damper casing with minimum 8g x 15mm steel self-drilling screw at 100mm centres or at least 2 per side.

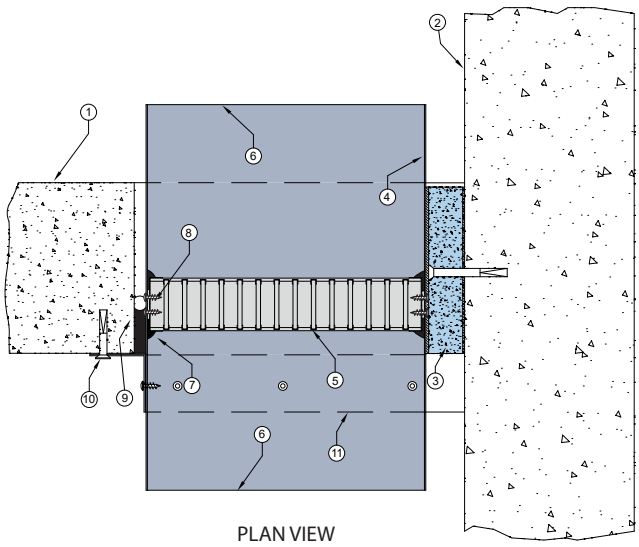

PLAN VIEW

LVH44 in steel casing penetrating fire rated Masonry / Concrete wall

FRL -/120/30 (up to 1200mm x 600mm)

Fire Resistance in accordance with

AS1530.4 2014

Approval Ref

EXOVA EWFA 33233400

Max single cell size

600mm x 600mm

Max modular size

600mm x 1200mm / 1200mm x 600mm

INSTALLATION INSTRUCTIONS

- Prepare the wall opening to accept the fire damper and install in wall, as shown in system detail.
- Non-combustible block is fixed to wall, as per point 3.
- Lorient intumescent sealant liberally applied to block and duct containing damper is positioned and pushed up tight to packing block.
- Firestop the gap between the casing and wall with Lorient intumescent sealant, note fill details in point 9.
- 3 off perimeter angles are mechanically fixed to casing with steel self drilling screws or pop rivets and fixed to wall with steel expanding masonry anchor, as detailed in point 10.
- Ductwork shall be connected with breakaway joints, as per point 6.
- Ensure product identification labels are conspicuously positioned for easy identification.
- Ensure convenient access is provided to allow for AS1851 inspection and maintenance routines.
- Note: Damper casings, angles and fixings supplied by others.

WALL 6

FIRE RATED MASONRY / CONCRETE WALL SYSTEM

	DESCRIPTION
1	Masonry or concrete wall (minimum 75mm or thicker in accordance to AS3600 or AS3700 to achieve required FRL).
2	Angles fixed to wall with minimum dia 6.5mm x 35mm expanding masonry anchor (e.g dynabolt) or M6 x 30mm masonry hex screw bolt/anchor through 3 off or 4 off angle brackets according to damper size
3	20mm x 40mm x 40mm x 1mm Z275 galvanised steel angle brackets 3 off brackets for up to 300mm diameter and 4 brackets for larger sized up to 450mm diameter. Each angles fitted to the damper casing with minimum 8g x 15mm steel self-drilling screw.
4	Z275 galvanised steel casing minimum thickness 0.6mm.
5	Lorient LVH44C intumescent fire damper.
6	Casing terminates with breakaway joints, as per AS1682.2.
7	Fire damper perimeter sealed with Lorient intumescent sealant.
8	LVH44C fixed to casing with 2 x 8g x 25mm self drilling screw
9	Gap between casing and aperture filled with Lorient intumescent sealant. Backing rod used as required to control sealant fill depth to at least 50mm.. Maximum annular gap between casing and wall 25mm.

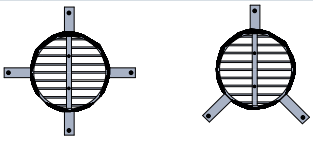

3 off fixing angles up to 250mm diameter 4 off fixing angles 300mm to 450mm diameter

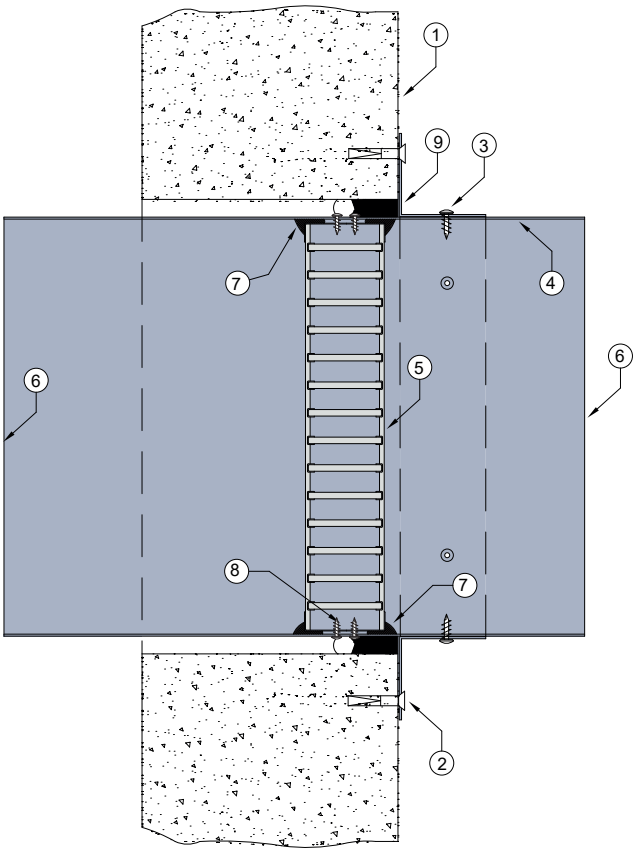

LVH44C in steel casing penetrating fire rated Masonry / Concrete wall

FRL -/120/30

Fire Resistance in accordance with

AS1530.4 2014

Approval Ref

EXOVA EWFA 33233400

Max size

450mm diameter

Note: LVH44C up to 450mm diameter can achieve up to -/120/120 when fitted with R1.0 Polyester insulated flexible duct.

INSTALLATION INSTRUCTIONS

- Prepare the wall opening to accept the fire damper and install in wall, as shown in system detail.
- Fix angle brackets to casing with steel self drilling screws or pop rivets, as detailed in points 2 & 3.
- Centralise in aperture and mechanically fix to wall. Firestop the gap between the casing and wall with Lorient intumescent sealant, note fill details in point 9.
- Ductwork shall be connected with breakaway joints, as per point 6.
- Ensure product identification labels are conspicuously positioned for easy identification.
- Ensure convenient access is provided to allow for AS1851 inspection and maintenance routines.
- Note: Fixings supplied by others.

WALL 7

FIRE RATED CSR HEBEL® WALL SYSTEM

	DESCRIPTION
1	CSR Hebel® wall with prepared aperture (minimum 75mm thick).
2	0.6mm (min) Z275 galvanised steel angles to all four sides. Angle dimensions shall be continuous and at least 2 x the dimension of the gap between the damper casing and the penetrated element.
3	Each angle fixed to damper casing with minimum 8g x 15mm steel self-drilling screw at 100mm centres or at least 2 per side.
4	Z275 galvanised steel casing minimum thickness 0.6mm.
5	Lorient LVH44 intumescent fire damper screw fixed into casing.
6	Casing terminates with breakaway joints, as per AS1682.2
7	Fire damper perimeter sealed with Lorient intumescent sealant.
8	LVH44 fixed to casing with 2 x 8g x 25mm self drilling screw on all 4 sides at 100mm centres.
9	Gap between casing and aperture filled with Lorient intumescent sealant. Backing rod used as required to control sealant fill depth to at least 25mm. Maximum annular gap between casing and wall 25mm.

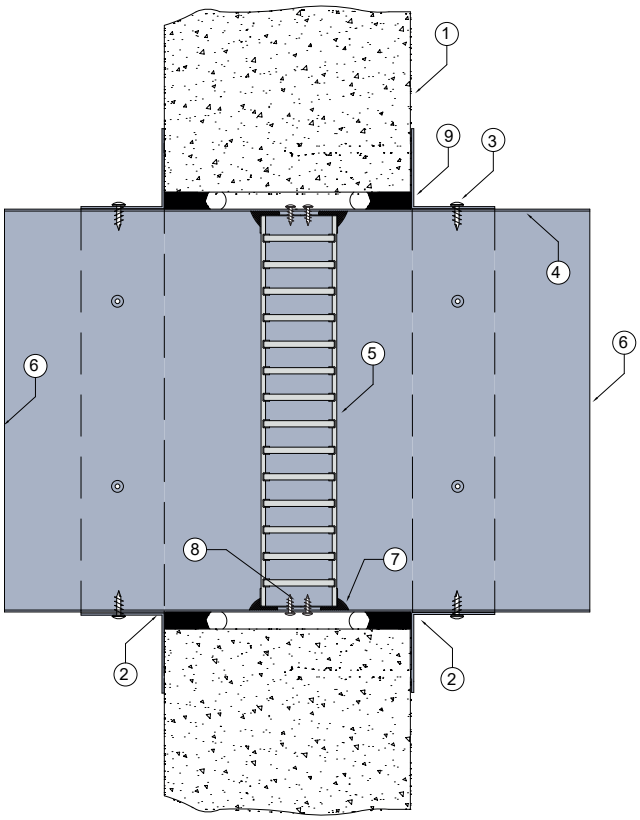

LVH44 in steel casing penetrating fire rated CSR Hebel® wall

FRL -/120/30

Fire Resistance in accordance with

AS1530.4 2014

Approval Ref

EXOVA EWFA 33233400

Max single cell size

600mm x 600mm

INSTALLATION INSTRUCTIONS

- Prepare the wall opening to accept the fire damper and install in wall, as shown in system detail.
- Centralise the casing and firestop the gap between the casing and wall with Lorient intumescent sealant, note fill details in point 9.
- Perimeter angles are mechanically fixed to casing with steel self drilling screws or pop rivets, as detailed in points 2 & 3.
- Ductwork shall be connected with breakaway joints, as per point 6.
- Ensure product identification labels are conspicuously positioned for easy identification.
- Ensure convenient access is provided to allow for AS1851 inspection and maintenance routines.
- Note: Damper casings, angles and fixings supplied by others.

WALL 8

FIRE RATED CSR HEBEL® WALL SYSTEM

	DESCRIPTION
1	CSR Hebel® wall with prepared aperture (minimum 75mm thick).
2	Angles fixed to wall with No.10-14 x 65mm Hex head Type 17 coarse thread screws at 100mm centres or at least 2 per side.
3	0.6mm (min) Z275 galvanised steel angles to all four sides. Angle dimensions shall be continuous and at least 2 x the dimension of the gap between the damper casing and the penetrated element. Each angle fixed to damper casing with minimum 8g x 15mm steel self-drilling screw at 150mm centres or at least 2 per side
4	Z275 galvanised steel casing minimum thickness 0.6mm.
5	Lorient LVH44 intumescent fire damper screw fixed into casing.
6	Casing terminates with breakaway joints, as per AS1682.2.
7	Fire damper perimeter sealed with Lorient intumescent sealant.
8	LVH44 fixed to casing with 2 x 8g x 25mm self drilling screw on all 4 sides at 100mm centres.
9	Gap between casing and aperture filled with Lorient intumescent sealant. Backing rod used as required to control sealant fill depth to at least 50mm. Maximum annular gap bewteen casing and wall 25mm.

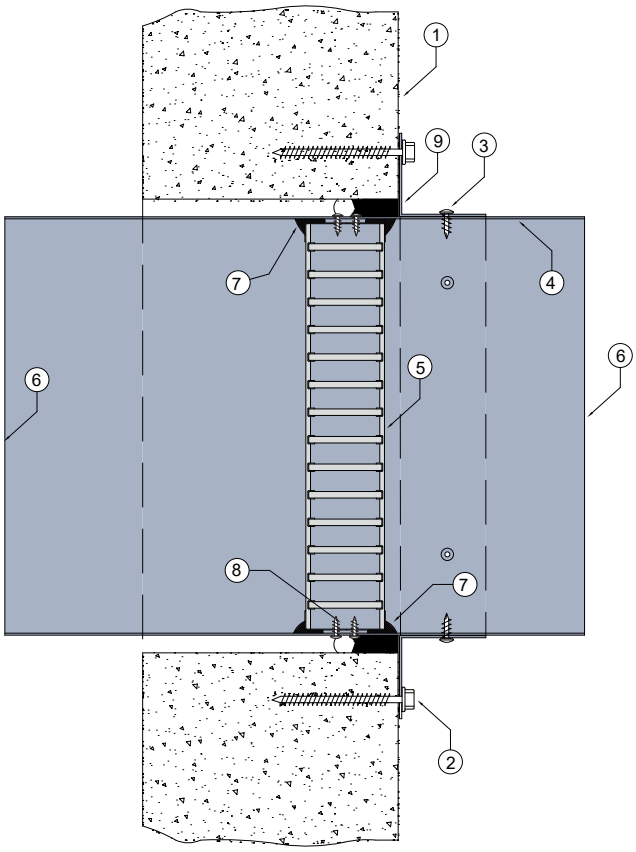

LVH44 in steel casing penetrating fire rated CSR Hebel® wall

FRL -/120/30

Fire Resistance in accordance with

AS1530.4 2014

Approval Ref

EXOVA EWFA 33233400

Max single cell size

600mm x 600mm

INSTALLATION INSTRUCTIONS

- Prepare the wall opening to accept the fire damper and install in wall, as shown in system detail.
- Centralise the casing and firestop the gap between the casing and wall with Lorient intumescent sealant, note fill details in point 9.
- Perimeter angles are mechanically fixed to casing with steel self drilling screws or pop rivets, as detailed in points 2 & 3.
- Ductwork shall be connected with breakaway joints, as per point 6.
- Ensure product identification labels are conspicuously positioned for easy identification.
- Ensure convenient access is provided to allow for AS1851 inspection and maintenance routines.
- Note: Damper casings, angles and fixings supplied by others.

WALL 9

FIRE RATED CSR HEBEL® WALL SYSTEM

	DESCRIPTION
1	CSR Hebel® wall with prepared aperture (minimum 75mm thick).
2	Angles fixed to wall with No.10-14 x 65mm Hex head Type 17 coarse thread screws through 3 off or 4 off angle brackets according to damper size.
3	40mm x 40mm x 20mm x 1mm Z275 galvanised steel angle brackets 3 off brackets for up to 300mm diameter and 4 brackets for larger sized up to 450mm diameter. Each angles fitted to the damper casing with minimum 8g x 15mm steel self-drilling screw.
4	Z275 galvanised steel casing minimum thickness 0.6mm.
5	Lorient LVH44C intumescent fire damper screw fixed into casing.
6	Casing terminates with breakaway joints, as per AS1682.2
7	Fire damper perimeter sealed with Lorient intumescent sealant.
8	LVH44C fixed to casing with 2 x 8g x 25mm self drilling screw
9	Gap between casing and aperture filled with Lorient intumescent sealant. Backing rod used as required to control sealant fill depth to at least 25mm. Maximum annular gap between casing and wall 25mm.

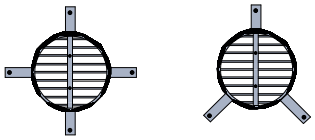

3 off fixing angles up to 250mm diameter 4 off fixing angles 300mm to 450mm diameter

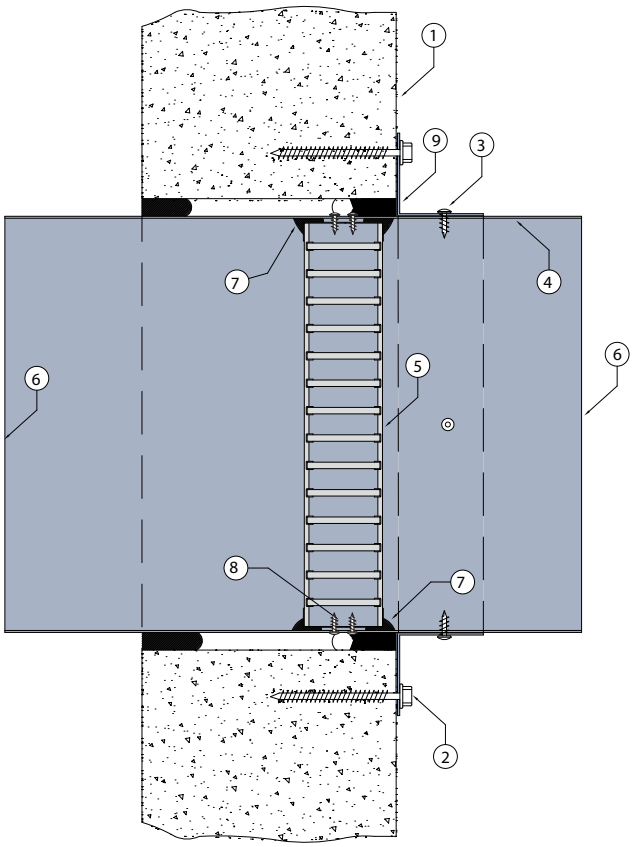

LVH44C in steel casing penetrating fire rated CSR Hebel® wall

FRL Up to -/120/30

Fire Resistance in accordance with

AS1530.4 2014

Approval Ref

EXOVA EWFA 33233400

Max size

450mm diameter

Note: LVH44C up to 450mm diameter can achieve up to -/120/120 when fitted with R1.0 Polyester insulated flexible duct.

INSTALLATION INSTRUCTIONS

- Prepare the wall opening to accept the fire damper and install in wall, as shown in system detail.
- Centralise the casing and firestop the gap between the casing and wall with Lorient intumescent sealant, note fill details in point 9.
- Perimeter angles are mechanically fixed to casing with steel self drilling screws or pop rivets, as detailed in points 2 & 3.
- Ductwork shall be connected with breakaway joints, as per point 6.
- Ensure product identification labels are conspicuously positioned for easy identification.
- Ensure convenient access is provided to allow for AS1851 inspection and maintenance routines.
- Note: Fixings supplied by others.

WALL 10

FIRE RATED CSR HEBEL® WALL SYSTEM

	DESCRIPTION
1	CSR Hebel® wall installed as per manufacturers guidelines (minimum 75mm thick).
2	Lorient LVH44 intumescent fire damper.
3	Angles fixed to wall with No.10-14 x 65mm Hex head Type 17 coarse thread screws at 150mm centres or at least 2 per side.
4	0.6mm (min) Z275 galvanised steel angles to all four sides. Angle dimensions shall be continuous and at least 2 x the dimension of the gap between damper casing and the penetrated element. Each Angles fixed to damper casing with minimum 8g x 15mm steel self-drilling screw. Screw at 100mm centre or at least 2 per side.
5	Z275 galvanised steel casing minimum thickness 0.6mm.
6	Casing terminates with breakaway joints, as per AS1682.1.
7	Gap between casing and aperture filled with Lorient intumescent sealant. Backing rod used as required to control sealant fill depth to at least 50mm. Maximum annular gap between casing and wall 25mm.
8	Duct supported on non-fire side with noggin between studs.
9	LVH44 fixed to casing with 2 x 8g x 25mm self drilling screw on all 4 sides at 100mm centres.

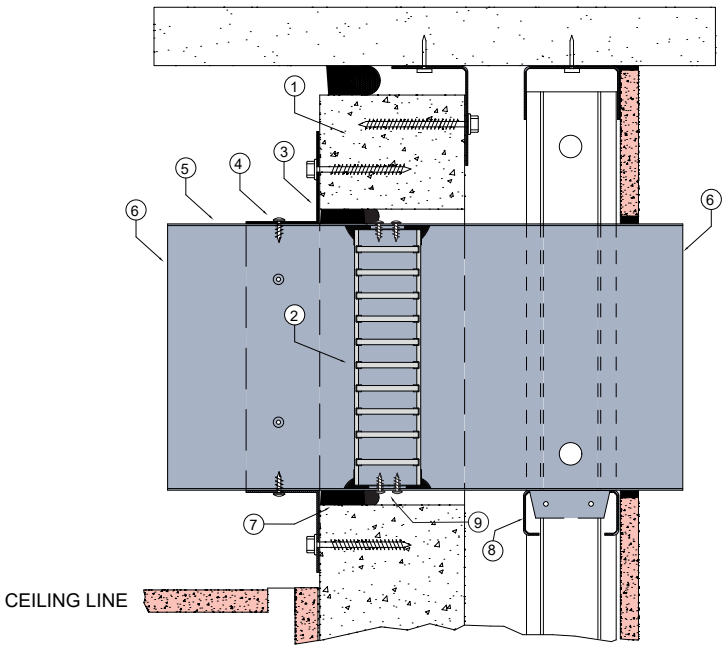

LVH44 in steel casing penetrating fire rated CSR Hebel® wall

FRL -/120/30

Fire Resistance in accordance with

AS1530.4 2014

Approval Ref

EXOVA EWFA 33233400

Max single cell size

600mm x 600mm

INSTALLATION INSTRUCTIONS

- Prepare the wall opening to accept the fire damper and install in wall, as shown in system detail.
- Centralise the damper casing and firestop the gap between the casing and wall with Lorient intumescent sealant, see point 7 for fill details.
- Perimeter angles are mechanically fixed to casing with steel self drilling screws or pop rivets, as detailed in points 3 & 4.
- Ductwork shall be connected with breakaway joints, as per point 6.
- Ensure product identification labels are conspicuously positioned for easy identification.
- Ensure convenient access is provided to allow for AS1851 inspection and maintenance routines.
- Note: Damper casings, angles and fixings supplied by others.

WALL 11

FIRE RATED CSR HEBEL® WALL SYSTEM

	DESCRIPTION
1	CSR Hebel® wall installed as per manufacturers instructions (minimum 75mm thick).
2	Lorient LVH44C circular intumescent fire damper.
3	Angles fixed to wall with No.10-14 x 65mm Hex head Type 17 coarse thread screws. Through 3 off or 4 off angle brackets according to damper size.
4	40mm x 40mm x 20mm x 1mm Z275 galvanised steel angle brackets 3 off brackets for up to 300mm diameter and 4 brackets for larger sized up to 450mm diameter. Each angles fitted to the damper casing with minimum 8g x 15mm steel self-drilling screw.
5	Z275 galvanised steel casing minimum thickness 0.6mm.
6	Casing terminates with slip joints in accordance with AS1682.1.
7	Gap between casing and aperture filled with Lorient intumescent sealant. Backing rod used as required to control sealant fill depth to at least 50mm. Maximum annular gap between casing and wall 25mm.
8	Duct supported on non-fire side with noggin between studs.
9	AS1851 fire damper maintenance across point required this side.
10	LVH44C fixed to casing with 2 x 8g x 25mm self drilling screw.

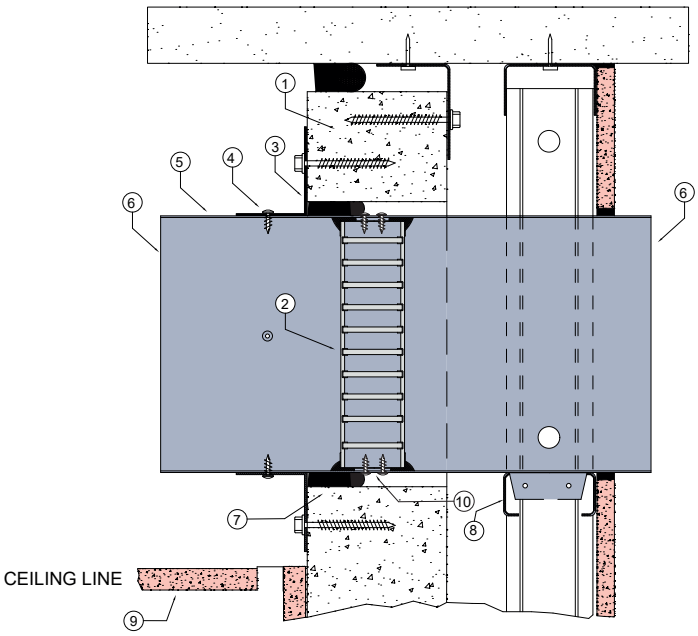

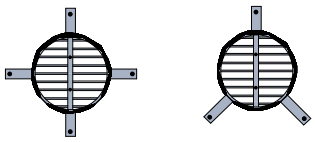

3 off fixing angles up to 250mm diameter 4 off fixing angles 300mm to 450mm diameter

LVH44C in steel casing penetrating fire rated CSR Hebel® wall

FRL -/120/30

Fire Resistance in accordance with

AS1530.4 2014

Approval Ref

EXOVA EWFA 33233400

Max single cell size

450mm diameter

Note: LVH44C up to 450mm diameter can achieve up to -/120/120 when fitted with R1.0 Polyester insulated flexible duct

INSTALLATION INSTRUCTIONS

- Prepare the wall opening to accept the fire damper and install in wall, as shown in system detail.
- Centralise the casing and firestop the gap between the casing and wall with Lorient intumescent sealant, note fill details in point 7.
- Perimeter angles are mechanically fixed to casing with steel self drilling screws or pop rivets, as detailed in points 3 & 4.
- Ductwork shall be connected with breakaway joints, as per point 6.
- Ensure product identification labels are conspicuously positioned for easy identification.
- Ensure convenient access is provided to allow for AS1851 inspection and maintenance routines.
- Note: Fixings supplied by others.

WALL 12 TIGHT TO SLAB

FIRE RATED CSR HEBEL® WALL SYSTEM

	DESCRIPTION
1C	CSR Hebel® wall (minimum 75mm thick).
2	Lorient LVH44 intumescent fire damper.
3	Angles fixed to wall with No.10-14 x 65mm Hex head Type 17 coarse thread screws at 150mm centres or at least 2 per side.
4	0.6mm (min) Z275 galvanised steel angles to all four sides. Angle dimensions shall be continuous and at least 2 x the dimension of the gap between damper casing and the penetrated element. Each Angles fixed to damper casing with minimum 8g x 15mm steel self-drilling screw. Screw at 100mm centre or at least 2 per side.
5	Z275 galvanised steel casing min thickness 0.6mm.
6	LVH44 fixed to casing with 2 x 8g x 25mm self drilling screw on all 4 sides at 100mm centres.
7	Fire damper perimeter sealed with Lorient intumescent sealant.
8	Gap between casing and aperture filled full depth (at least 50mm depth) with Lorient intumescent sealant. Maximum annular gap between casing and wall is 25mm.
9	Casing terminates with breakaway joint as per AS1682.2.
10	100mm wide x min 25mm think non-combustible (with FRL -/120/120) or 100mm x 50mm thick TBA Firefly Intubatt bedded in minimum 1mm layer of intumescent sealant and running full width of the aperture. Block mechanically fixed to slab with expanding steel anchors (e.g Dynabolt or similar).

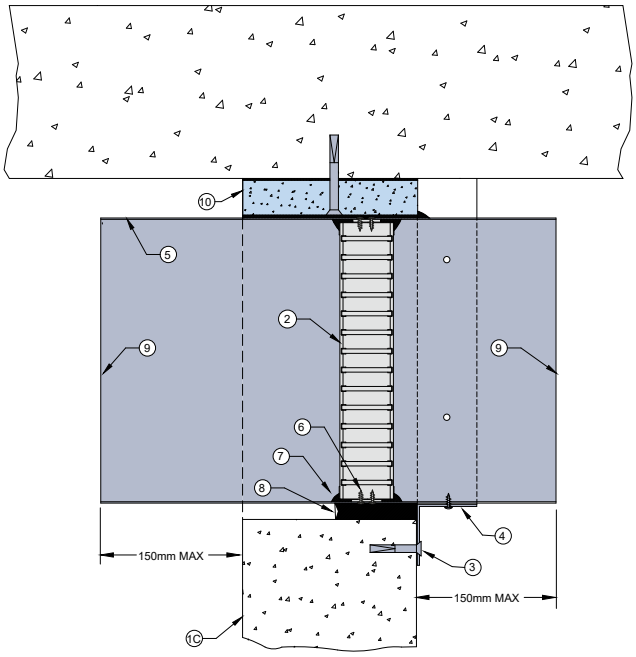

LVH44 in steel casing penetrating fire rated CSR Hebel® wall – tight to slab

FRL -/120/30

Fire Resistance in accordance with

AS1530.4 2014

Approval Ref

EXOVA EWFA 33233400

Max size

600mm x 600mm

INSTALLATION INSTRUCTIONS

- Prepare the wall opening to accept the fire damper and install in wall, as shown in system detail.
- Non-combustible TBA Intubatt block is fixed to slab, as per point 10.
- Lorient intumescent sealant liberally applied to block and duct containing damper is positioned and pushed up tight to block.
- Firestop the gap between the casing and wall with Lorient intumescent sealant, note fill details in point 8.
- 3 off perimeter angles are mechanically fixed to bottom and sides of casing with steel self drilling screws and fixed to wall with masonry anchors, as detailed in point 3.
- Ductwork shall be connected with breakaway joints, as per point 9.
- Ensure product identification labels are conspicuously positioned for easy identification.
- Ensure convenient access is provided to allow for AS1851 inspection and maintenance routines.
- Note: Fixings supplied by others.

STUD WALL 1

FIRE RATED PLASTERBOARD WALL SYSTEM

	DESCRIPTION
1	13mm fire rated plasterboard.
2	Steel channel lining out aperture to all four sides.
3	Angles fixed to wall and steel framing with minimum 6-18x40mm D or S type steel screw at 100mm centres or at least 2 per side.
4	Cavity around penetration filled with rockwool (minimum density of 70kg/m3 and thickness of 13mm).
5	Z275 galvanised steel casing minimum thickness 0.6mm.
6	Lorient LVH44C circular intumescent fire damper screw fixed into casing.
7	Casing terminates with breakaway joints, as per AS1682.2.
8	Fire damper perimeter sealed with Lorient intumescent sealant.
9	LVH44C fixed to casing with 2 x 8g x 25mm self drilling screws.
10	Gap between casing and aperture filled full depth with Lorient intumescent sealant. Maximum annular gap between casing and wall 25mm.
11	40mm x 40mm x 20mm x 1mm Z275 galvanised steel angle brackets 3 off brackets for up to 300mm diameter and 4 brackets for larger sized up to 450mm diameter. Each angles fitted to the damper casing with minimum 8g x 15mm steel self-drilling screw.

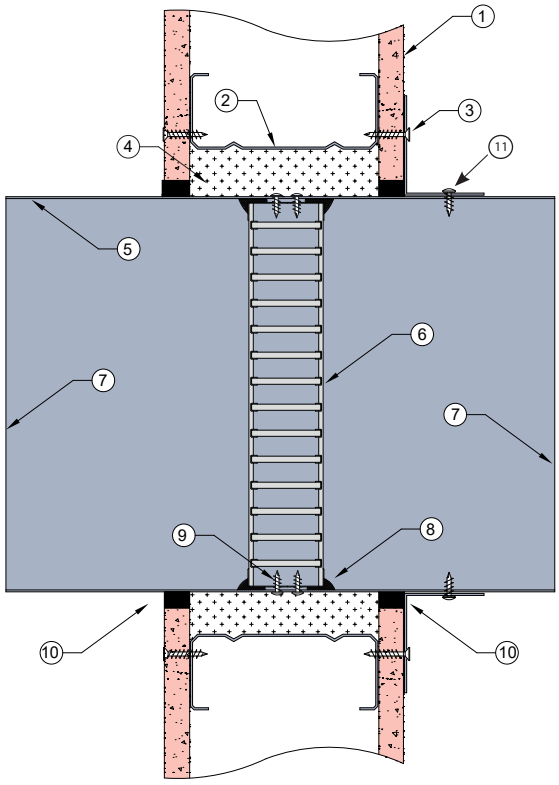

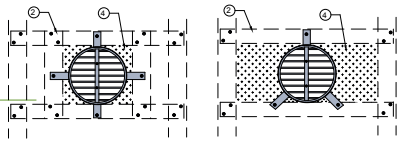

Circular LVH44 tied back to studs with steel track to ensure damper is fully supported within the framing structure of the wall.

Internal cavity around LVH44C packed out with rockwool to retain wall insulation.

LVH44C in steel casing penetrating fire rated Plasterboard wall

FRL -/60/30

Fire Resistance in accordance with

AS1530.4 2014

Approval Ref

EXOVA EWFA 33233400

Max cell size

450mm diameter

Note: LVH44C can achieve -/60/60 when fitted with R1.0 Polyester insulated flexible duct.

INSTALLATION INSTRUCTIONS

- Prepare the wall opening to accept the fire damper and install in wall as shown in this system detail.
- Fill cavity around penetration with rockwool, as per point 4.
- Fix angle brackets to casing with steel self drilling screws or pop rivets as detailed in points 3.
- Centralise in aperture and mechanically fix to wall. Firestop the gap between the casing and wall with Lorient intumescent sealant, note fill details in point 10.
- Ductwork shall be connected with breakaway joints, as per point 7.
- Ensure product identification labels are conspicuously positioned for easy identification.
- Ensure convenient access is provided to allow for AS1851 inspection and maintenance routines.
- Note: Fixings and rockwool supplied by others.

STUD WALL 2

FIRE RATED PLASTERBOARD WALL SYSTEM

	DESCRIPTION
1	13mm fire rated plasterboard.
2	13mm fire rated plasterboard lining aperture.
3	Steel stud framing out aperture.
4	Angles fixed to wall and steel framing with minimum 6-18x40mm D or S type steel screw at 100mm centres or at least 2 per side.
5	0.6mm (min) Z275 galvanised steel angles to all four sides. Angle dimension shall be continuous and at least 2 x the dimension of the gap between damper casing and the penetrated element. Each angle fixed to damper casing with minimum 8g x 15mm steel self-drilling screw at 100mm centres or at least 2 per side.
6	Z275 galvanised steel casing minimum thickness 0.6mm.
7	Lorient LVH44 intumescent fire damper screw fixed into casing.
8	Casing terminates with breakaway joints, as per AS1682.2.
9	Fire damper perimeter sealed with Lorient intumescent sealant.
10	LVH44 fixed to casing with 2 x 8g x 25mm self drilling screw on all 4 sides at 100mm centres.
11	Gap between casing and aperture filled with Lorient intumescent sealant. Backing rod used as required to .control sealant fill depth to at least 25mm. Maximum annular gap between casing and wall 25mm.

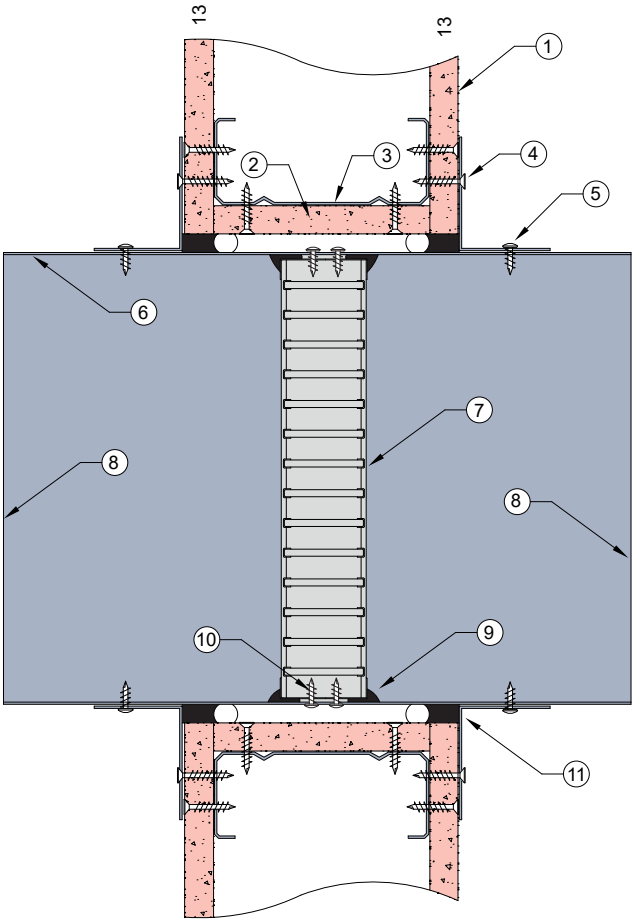

LVH44 in steel casing penetrating fire rated Plasterboard wall

FRL -/60/30

Fire Resistance in accordance with

AS1530.4 2014

Approval Ref

EXOVA EWFA 33233400

Max single cell size

600mm x 600mm

INSTALLATION INSTRUCTIONS

- Line out the wall opening to accept the fire damper, as shown in this system detail.
- Centralise the damper casing and firestop the gap between the casing and wall with Lorient intumescent sealant, see point 11 for fill details.
- Perimeter angles are mechanically fixed to casing with steel self drilling screws and to wall with appropriate length needle point drywall screws, as detailed in points 4 & 5.
- Ductwork shall be connected with breakaway joints, as per point 8.
- Ensure product identification labels are conspicuously positioned for easy identification.
- Ensure convenient access is provided to allow for AS1851 inspection and maintenance routines.
- Note: Damper casings, angles and fixings supplied by others.

STUD WALL 3

FIRE RATED PLASTERBOARD WALL SYSTEM

	DESCRIPTION
1	16mm fire rated plasterboard.
2	16mm fire rated plasterboard lining aperture.
3	Steel stud framing out aperture.
4	Angles fixed to wall and steel framing with minimum 6-18x40mm D or S type steel screw at 100mm centres or at least 2 per side.
5	0.6mm (min) Z275 galvanised steel angles to all four sides. Angle dimension shall be continuous and at least 2 x the dimension of the gap between damper casing and the penetrated element. Each angle fixed to damper casing with minimum 8g x 15mm steel self-drilling screw at 100mm centres or at least 2 per side.
6	Z275 galvanised steel casing minimum thickness 0.6mm.
7	Lorient LVH44 intumescent fire damper screw fixed into casing.
8	Casing terminates with breakaway joints, as per AS1682.2.
9	Fire damper perimeter sealed with Lorient intumescent sealant.
10	LVH44 fixed to casing with 2 x 8g x 25mm self drilling screw on all 4 sides at 100mm centres.
11	Gap between casing and aperture filled with Lorient intumescent sealant. Backing rod used as required to control sealant fill depth to at least 25mm. Maximum annular gap between casing and wall 25mm.

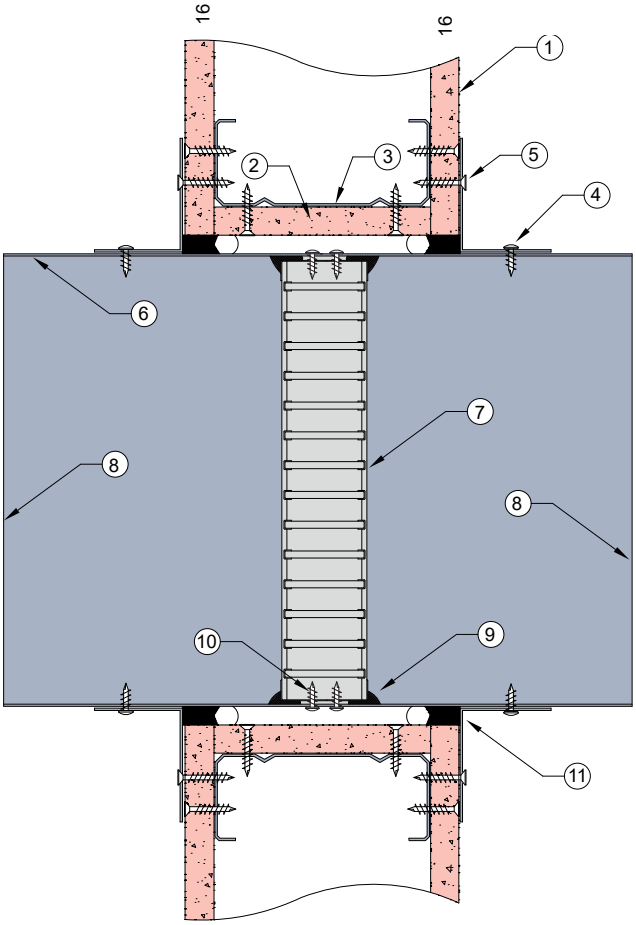

LVH44 in steel casing penetrating fire rated Plasterboard wall

FRL -/90/30

Fire Resistance in accordance with

AS1530.4 2014

Approval Ref

EXOVA EWFA 33233400

Max single cell size

600mm x 600mm

INSTALLATION INSTRUCTIONS

- Line out the wall opening to accept the fire damper, as shown in this system detail.
- Centralise the damper casing and firestop the gap between the casing and wall with Lorient intumescent sealant, see point 11 for fill details.
- Perimeter angles are mechanically fixed to casing with steel self drilling screws and to wall with appropriate length needle point drywall screws, as detailed in points 4 & 5.
- Ductwork shall be connected with breakaway joints, as per point 8.
- Ensure product identification labels are conspicuously positioned for easy identification.
- Ensure convenient access is provided to allow for AS1851 inspection and maintenance routines.
- Note: Damper casings, angles and fixings supplied by others.

STUD WALL 4

FIRE RATED PLASTERBOARD WALL SYSTEM

	DESCRIPTION
1	16mm fire rated plasterboard.
2	Steel channel lining out aperture to all four sides.
3	Angles fixed to wall and steel framing with minimum 6-18x40mm D or S type steel screw through 3 off or 4 off angle brackets according to damper size.
4	Cavity around penetration filled with rockwool (minimum density of 70 kg/m3 and thickness of 13mm).
5	Z275 galvanised steel casing minimum thickness 0.6mm.
6	Lorient LVH44C circular intumescent fire damper screw fixed into casing.
7	Casing terminates with breakaway joints, as per AS1682.2.
8	Fire damper perimeter sealed with Lorient intumescent sealant.
9	LVH44C fixed to casing with 2 x 8g x 25mm self drilling screw
10	Gap between casing and aperture filled full depth with Lorient intumescent sealant. Maximum annular gap between casing and wall 25mm.
11	Length* x 40mm x 20mm x 1mm Z275 galvanised steel angle brackets 3 off brackets for up to 300mm diameter and 4 brackets for larger sized up to 450mm diameter. (*Length to be at least 2 x rockwool thickness) Each angles fitted to the damper casing with minimum 8g x 15mm steel self-drilling screw.

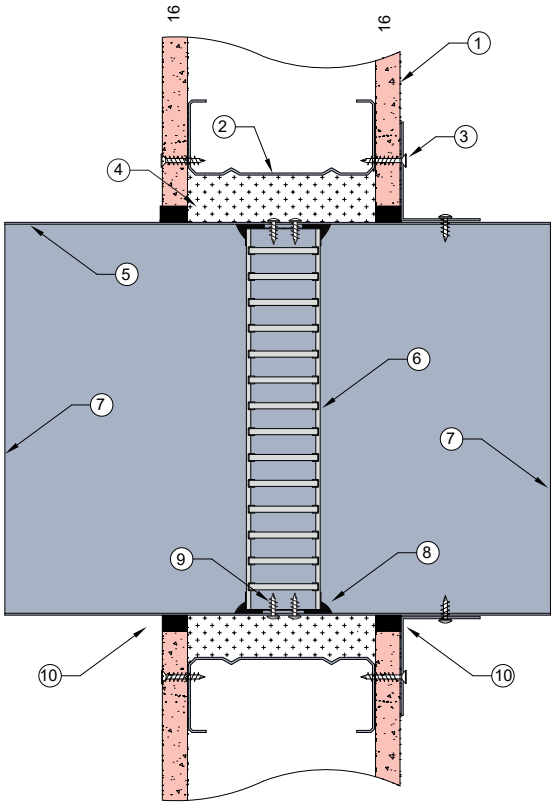

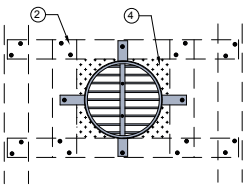

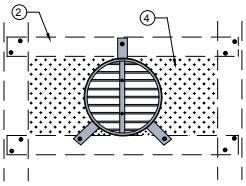

Circular LVH44 tied back to studs with steel track to ensure damper is fully supported within the framing structure of the wall.

Internal cavity around LVH44C packed out with rockwool to retain wall insulation.

LVH44C in steel casing penetrating fire rated Plasterboard wall

FRL -/90/30

Fire Resistance in accordance with

AS1530.4 2014

Approval Ref

EXOVA EWFA 33233400

Max cell size

450mm diameter

Note: LVH44C can achieve -/90/90 when fitted with R1.0 Polyester insulated flexible duct.

INSTALLATION INSTRUCTIONS

- Prepare the wall opening to accept the fire damper and install in wall as shown in this system detail.
- Fill cavity around penetration with rockwool, as per point 4.
- Fix angle brackets to casing with steel self drilling screws or pop rivets as detailed in points 3.
- Centralise in aperture and mechanically fix to wall. Firestop the gap between the casing and wall with Lorient intumescent sealant, note fill details in point 10.
- Ductwork shall be connected with breakaway joints, as per point 7.
- Ensure product identification labels are conspicuously positioned for easy identification.
- Ensure convenient access is provided to allow for AS1851 inspection and maintenance routines.
- Note: Fixings and rockwool supplied by others.

STUD WALL 5

FIRE RATED PLASTERBOARD WALL SYSTEM

	DESCRIPTION
1	2 x 13mm fire rated plasterboard.
2	2 x 13mm fire rated plasterboard lining aperture.
3	Steel stud framing out aperture.
4	Angles fixed to wall and steel framing with minimum 6-18x40mm D or S type steel screw at 100mm centres or at least 2 per side.
5	0.6mm (min) Z275 galvanised steel angles to all four sides. Angle dimension shall be continuous and at least 2 x the dimension of the gap between damper casing and the penetrated element. Each angle fixed to damper casing with minimum 8g x 15mm steel self-drilling screw at 100mm centres or at least 2 per side.
6	Z275 galvanised steel casing minimum thickness 0.6mm.
7	Lorient LVH44 intumescent fire damper screw fixed into casing.
8	Casing terminates with breakaway joints, as per AS1682.2.
9	Fire damper perimeter sealed with Lorient intumescent sealant.
10	LVH44 fixed to casing with 2 x 8g x 25mm self drilling screw on all 4 sides at 100mm centres.
11	Gap between casing and aperture filled with Lorient intumescent sealant. Backing rod used as required to control sealant fill depth to at least 25mm. Maximum annular gap between casing and wall 25mm.

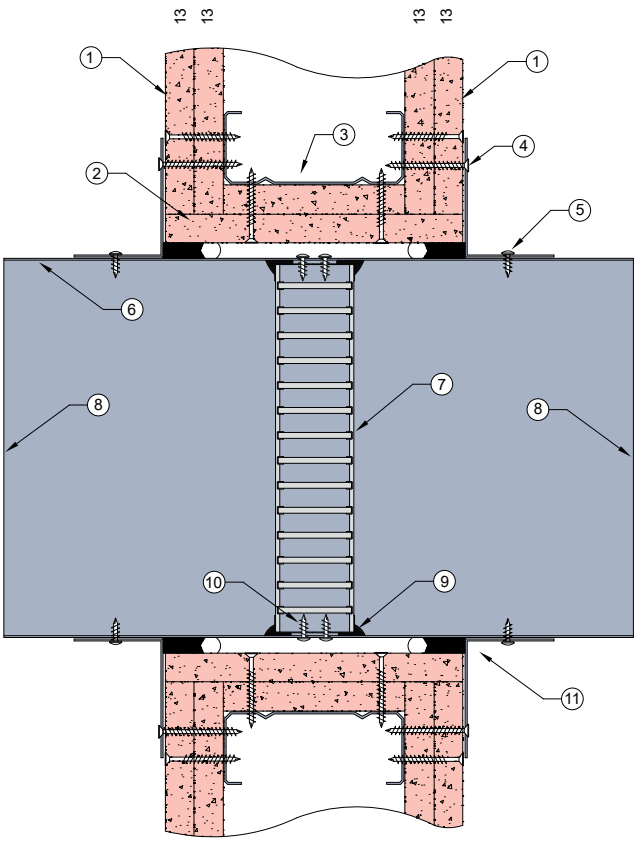

LVH44 in steel casing penetrating fire rated Plasterboard wall

FRL -/120/30

Fire Resistance in accordance with

AS1530.4 2014

Approval Ref

EXOVA EWFA 33233400

Max single cell size

600mm x 600mm

INSTALLATION INSTRUCTIONS

- Line out the wall opening to accept the fire damper, as shown in this system detail.
- Centralise the damper casing and firestop the gap between the casing and wall with Lorient intumescent sealant, see point 11 for fill details.
- Perimeter angles are mechanically fixed to casing with steel self drilling screws and to wall with appropriate length needle point drywall screws, as detailed in points 4 & 5.
- Ductwork shall be connected with breakaway joints, as per point 8.
- Ensure product identification labels are conspicuously positioned for easy identification.
- Ensure convenient access is provided to allow for AS1851 inspection and maintenance routines.
- Note: Damper casings, angles and fixings supplied by others.

STUD WALL 6

FIRE RATED PLASTERBOARD WALL SYSTEM

	DESCRIPTION
1	2 x 13mm fire rated plasterboard wall.
2	Steel channel lining out aperture to all four sides.
3	Angles fixed to wall and steel framing with minimum 6-18x40mm D or S type steel screw through 3 off or 4 off angle brackets according to damper size.
4	Cavity around penetration filled with rockwool (minimum density of 70kg/m3 and thickness of 13mm).
5	Z275 galvanised steel casing minimum thickness 0.6mm.
6	Lorient LVH44C intumescent fire damper screw fixed into casing.
7	Casing terminates with breakaway joints, as per AS1682.2.
8	Fire damper perimeter sealed with Lorient intumescent sealant.
9	LVH44C fixed to casing with 2 x 8g x 25mm self drilling screw
10	Gap between casing and aperture filled full depth with Lorient intumescent sealant. Maximum annular gap between casing and wall 25mm.
11	Length* x 40mm x 20mm x 1mm Z275 galvanised steel angle brackets 3 off brackets for up to 300mm diameter and 4 brackets for larger sized up to 450mm diameter. (*Length to be a least 2 x rockwool thickness) Each angles fitted to the damper casing with minimum 8g x 15mm steel self-drilling screw.

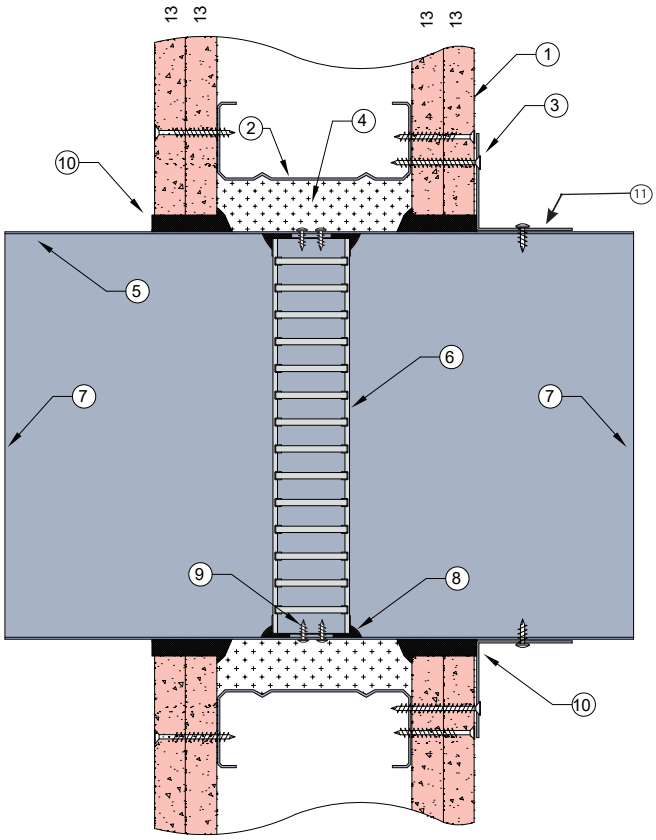

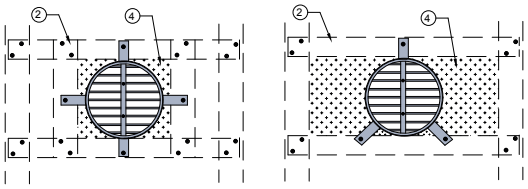

Circular LVH44 tied back to studs with steel track to ensure damper is fully supported within the framing structure of the wall.

Internal cavity around LVH44C packed out with rockwool to retain wall insulation.

LVH44C in steel casing penetrating fire rated Plasterboard wall

FRL -/120/30

Fire Resistance in accordance with

AS1530.4 2014

Approval Ref

EXOVA EWFA 33233400

Max cell size

450mm diameter

Note: LVH44C can achieve -/120/120 when fitted with R1.0 Polyester insulated flexible duct.

INSTALLATION INSTRUCTIONS

- Prepare the wall opening to accept the fire damper and install in wall as shown in this system detail.
- Fill cavity around penetration with rockwool, as per point 4.
- Fix angle brackets to casing with steel self drilling screws or pop rivets, as detailed in points 3.
- Centralise in aperture and mechanically fix to wall. Firestop the gap between the casing and wall with Lorient intumescent sealant, note fill details in point 10.
- Ductwork shall be connected with breakaway joints, as per point 7.
- Ensure product identification labels are conspicuously positioned for easy identification.
- Ensure convenient access is provided to allow for AS1851 inspection and maintenance routines.
- Note: Fixings and rockwool supplied by others.

STUD WALL 7

FIRE RATED PLASTERBOARD WALL SYSTEM

	DESCRIPTION
1	2 x 16mm fire rated plasterboard wall.
2	Steel channel lining out aperture to all four sides.
3	Angles fixed to wall and steel framing with minimum 6-18x45mm D or S type steel screw through 3 off or 4 off angle brackets according to damper size.
4	Cavity around penetration filled with rockwool (minimum density of 70kg/m3 and thickness of 13mm).
5	Z275 galvanised steel casing minimum thickness 0.6mm.
6	Lorient LVH44C circular intumescent fire damper screw fixed into casing.
7	Casing terminates with breakaway joints, as per AS1682.2.
8	Fire damper perimeter sealed with Lorient intumescent sealant.
9	LVH44C fixed to casing with 2 x 8g x 25mm self drilling screw.
10	Gap between casing and aperture filled full depth with Lorient intumescent sealant. Maximum annular gap between casing and wall 25mm.
11	Length* x 40mm x 20mm x 1mm Z275 galvanised steel angle brackets 3 off brackets for up to 300mm diameter and 4 brackets for larger sized up to 450mm diameter. (*Length to be at least 2 x rockwool thickness) Each angles fitted to the damper casing with minimum 8g x 15mm steel self-drilling screw.

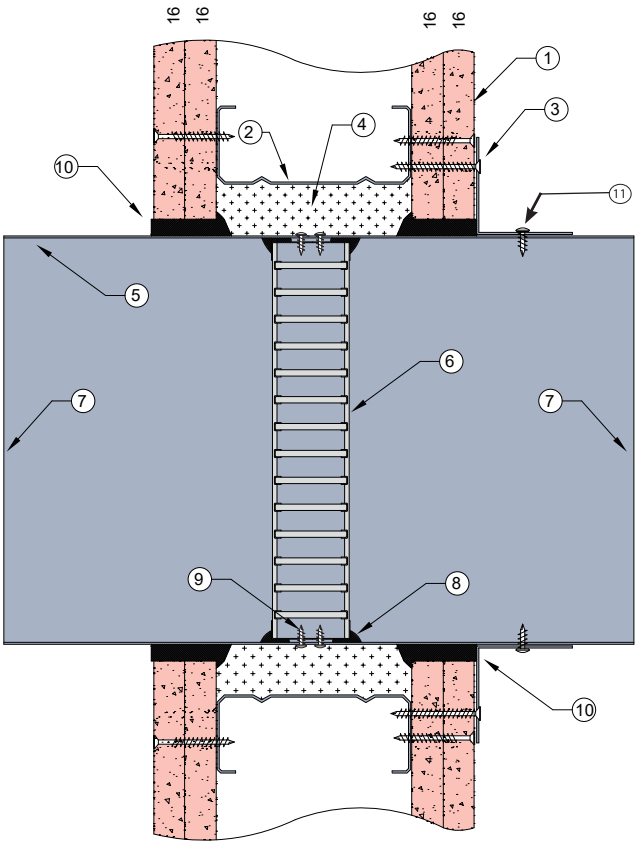

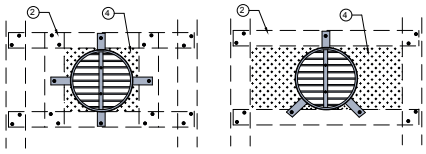

Circular LVH44 tied back to studs with steel track to ensure damper is fully supported within the framing structure of the wall.

Internal cavity around LVH44C packed out with rockwool to retain wall insulation.

LVH44C in steel casing penetrating fire rated Plasterboard wall

FRL -/120/30

Fire Resistance in accordance with

AS1530.4 2014

Approval Ref

EXOVA EWFA 33233400

Max cell size

450mm diameter

Note: LVH44C can achieve -/120/120 when fitted with R1.0 Polyester insulated flexible duct.

INSTALLATION INSTRUCTIONS

- Prepare the wall opening to accept the fire damper and install in wall as shown in this system detail.
- Fill cavity around penetration with rockwool, as per point 4.
- Fix angle brackets to casing with steel self drilling screws or pop rivets, as detailed in points 3.
- Centralise in aperture and mechanically fix to wall. Firestop the gap between the casing and wall with Lorient intumescent sealant, note fill details in point 10.
- Ductwork shall be connected with breakaway joints, as per point 7.
- Ensure product identification labels are conspicuously positioned for easy identification.
- Ensure convenient access is provided to allow for AS1851 inspection and maintenance routines.
- Note: Fixings and rockwool supplied by others.

STUD WALL 8

FIRE RATED PLASTERBOARD WALL SYSTEM

	DESCRIPTION
1A 1B	2 x 13mm fire rated plasterboard, or 2 x 16mm fire rated plasterboard
2	Fire rated plasterboard lining aperture (To be the exact same as selected 1A or 1B selection).
3	Steel stud framing out aperture.
4	Angles fixed to wall and steel framing at 150mm centres or at least 2 per side. Fixings: 2 x 13mm: minimum 6-18x40mm D or S type steel screw 2 x 16mm: minimum 6-18x45mm D or S type steel screw
5	0.6mm (min) Z275 galvanised steel angles to all four sides. Angle dimension shall be continuous and at least 2 x the dimension of the gap between damper casing and the penetrated element. Each angle fixed to damper casing with minimum 8g x 15mm steel self-drilling screw at 150mm centres or at least 2 per side.
6	Steel damper casing 0.6mm (min) Z275 Gal steel.
7	Lorient LVH44 intumescent fire damper screw fixed into casing.
8	Casing terminates with breakaway joints, as per AS1682.2.
9	Fire damper perimeter sealed with Lorient intumescent sealant.
10	LVH44 fixed to casing with 2 x 8g x 25mm self drilling screw on all 4 sides at 100mm centres.
11	Gap between casing and aperture filled with Lorient intumescent sealant. Backing rod used as required to control depth to 25mm deep. Maximum annular gap between casing and wall is 25mm.
12	Casing either turned out or fitted with angles to all four sides fixed in place with 8g x 25mm self drilling screw.
13	Cover grille (by others) screw fixed in place with either 6-18x40/45mm, D or S type screw to cover aperture.

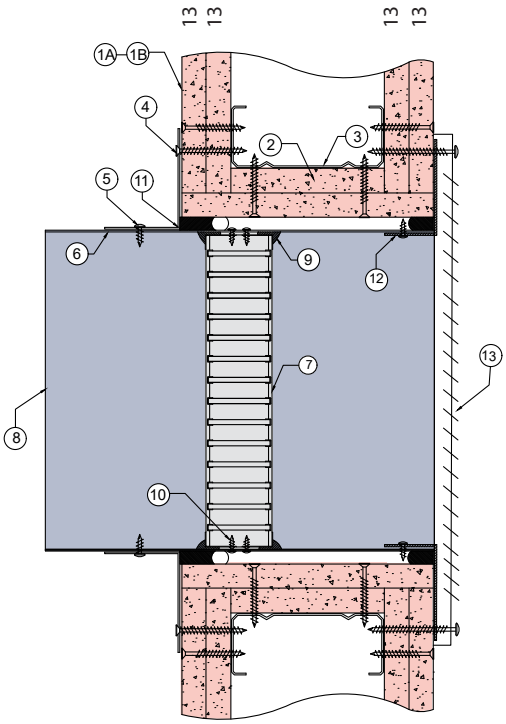

LVH44 in steel casing penetrating fire rated Plasterboard wall

FRL Up to -/120/30

Fire Resistance in accordance with

AS1530.4 2014

Approval Ref

EXOVA EWFA 33233400

Max single cell size

600mm x 600mm

INSTALLATION INSTRUCTIONS

- Line out the wall opening to accept the fire damper, as shown in this system detail.
- Centralise the damper casing and firestop the gap between gap and casing and wall with Lorient intumescent sealant, see point 11 for fill details.
- Perimeter angles are mechanically fixed to casing with steel self-drilling screws and to wall with appropriate length needle point drywall screws, as detailed in points 4 & 5 & 12.
- Ductwork shall be connected with breakaway joints, as per point 8.
- Cover grille screw fixed with appropriate length screws, ensuring screws fixed into steel stud.
- Ensure product identifications labels are conspicuously positioned for easy identification.
- Ensure convenient access is provided to allow for AS1851 inspection and maintenance routines.
- Note: Damper casings, angles and fixings supplied by others.

STUD WALL 9

FIRE RATED PLASTERBOARD WALL SYSTEM

	DESCRIPTION
1A	16mm fire rated plasterboard
1B	13mm fire rated plasterboard *FRL will vary depending on plasterboard thickness
2	Fire rated plasterboard lining aperture.
3	Steel stud framing out aperture.
4	Angles fixed to wall and steel framing with minimum 6-18x40mm D or S type steel screw at 100mm centres or at least 2 per side.
5	0.6mm (min) Z275 galvanised steel angles to all four sides. Angle dimension shall be continuous and at least 2 x the dimension of the gap between damper casing and the penetrated element. Each angle fixed to damper casing with minimum 8g x 15mm steel self-drilling screw at 100mm centres or at least 2 per side.
6	Steel damper casing 0.6mm (min) Z275 Gal steel.
7	Lorient LVH44 Intumescent fire damper screw fixed into casing.
8	Casing terminates with breakaway joints as per AS1682.2.
9	Fire damper perimeter sealed with Lorient intumescent sealant
10	LVH44 fixed to casing with 2 x 8g x 25mm self drilling screw on all 4 sides at 100mm centres.
11	Gap between casing and aperture filled with Lorient intumescent sealant. Backing rod used as required to control depth to 25mm deep. Maximum annular gap between casing and wall is 25mm.
12	Casing either turned out or fitted with angles to all four sides fixed in place with 8g x 25mm self drilling screw at 100mm centre or at least 2 per side.
13	Cover grille (by others) screw fixed in place with either 6-18x40mm D or S type screw to cover aperture at 100mm centre or at least 2 per side.

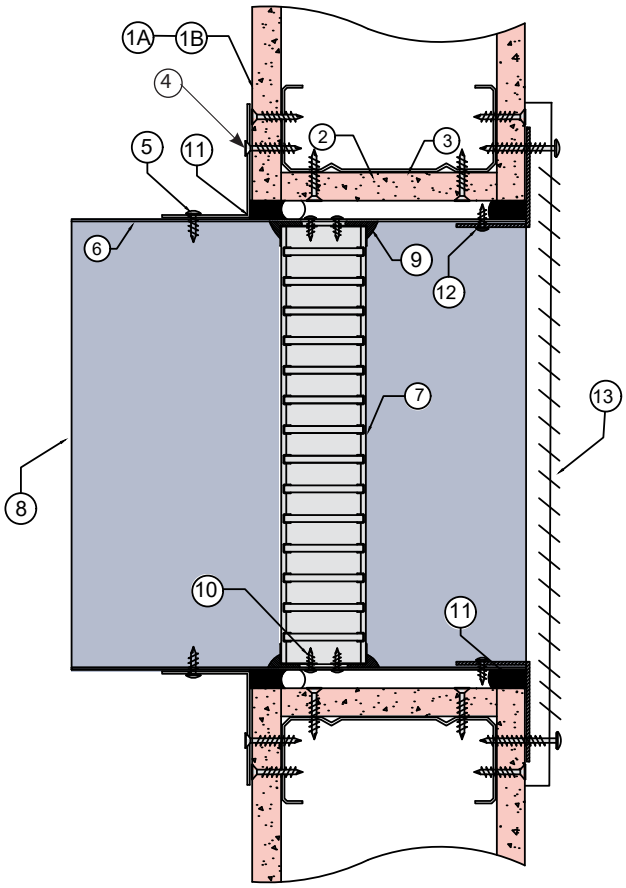

LVH44 in steel casing penetrating fire rated Plasterboard wall

FRL Up to -/90/30
(with 16mm FR plasterboard)

Up to -/60/30
(with 13mm FR plasterboard)

Fire Resistance in accordance with
AS1530.4 2014

Approval Ref
EXOVA EWFA 33233400

Max single cell size
600mm x 600mm

INSTALLATION INSTRUCTIONS

- Line out the wall opening to accept the fire damper, as shown in this system detail.
- Centralise the damper casing and firestop the gap between gap and casing and wall with Lorient intumescent sealant, see point 11 for fill details.
- Perimeter angles are mechanically fixed to casing with steel self-drilling screws and to wall with appropriate length needle point drywall screws, as detailed in points 4 & 5 & 12.
- Ductwork shall be connected with breakaway joints, as per point 8.
- Cover grille screw fixed with appropriate length screws, ensuring screws fixed into steel stud.
- Ensure product identifications labels are conspicuously positioned for easy identification.
- Ensure convenient access is provided to allow for AS1851 inspection and maintenance routines.
- Note: Damper casings, angles and fixings supplied by others.

TIMBER STUD WALL 10

FIRE RATED PLASTERBOARD WALL SYSTEM

	DESCRIPTION
1	13mm fire rated plasterboard.
2	13mm fire rated plasterboard lining aperture.
3	Timber stud / noggin min 70mm thick.
4	Each angle fixed to damper casing with minimum 8g x 15mm steel self-drilling screw at 100mm centres or at least 2 per side.
5	0.6mm (min) Z275 galvanised steel angles to all four sides. Angle dimension shall be continuous and at least 2 x the dimension of the gap between damper casing and the penetrated element.
6	Z275 galvanised steel casing minimum thickness 0.6mm.
7	Lorient LVH44 intumescent fire damper screw fixed into casing.
8	Casing terminates with breakaway joints, as per AS1682.2.
9	Fire damper perimeter sealed with Lorient intumescent sealant.
10	LVH44 fixed to casing with 2 x 8g x 25mm self drilling screw on all 4 sides at 100mm centres.
11	Gap between casing and aperture filled with Lorient intumescent sealant. Backing rod used as required to control sealant fill depth to at least 25mm. Maximum annular gap between casing and wall 25mm.

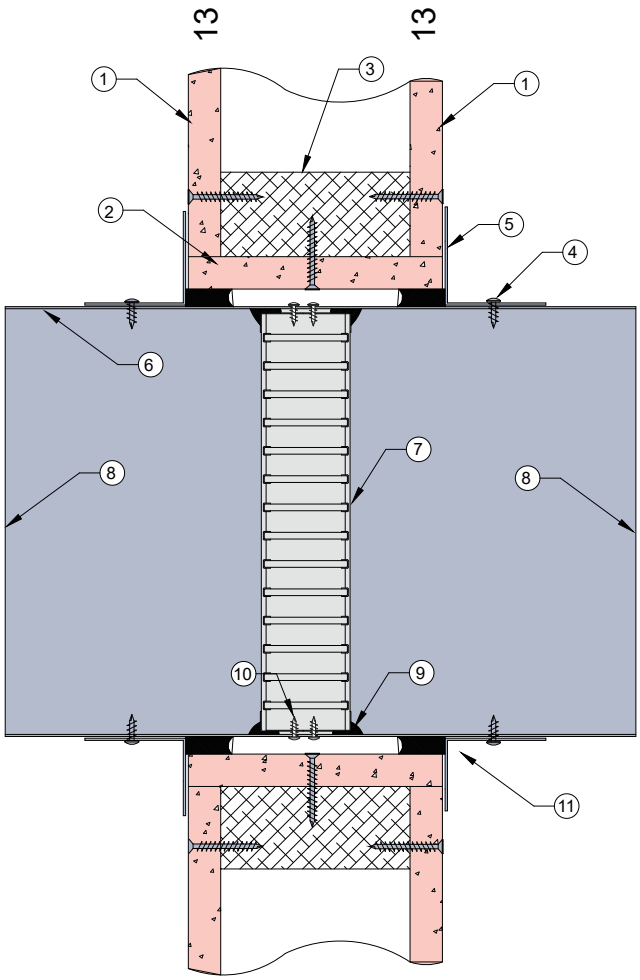

LVH44 in steel casing penetrating fire rated Plasterboard wall

FRL -/60/30

Fire Resistance in accordance with

AS1530.4 2014

Approval Ref

EXOVA EWFA 33233400

Max single cell size

600mm x 600mm

INSTALLATION INSTRUCTIONS

- Line out the wall opening to accept the fire damper, as shown in this system detail.
- Centralise the damper casing and firestop the gap between the casing and wall with Lorient intumescent sealant, see point 11 for fill details.
- Perimeter angles are mechanically fixed to casing with steel self drilling screws as detailed in points 4 & 5.
- Ductwork shall be connected with breakaway joints, as per point 8.
- Ensure product identification labels are conspicuously positioned for easy identification.
- Ensure convenient access is provided to allow for AS1851 inspection and maintenance routines.
- Note: Damper casings, angles and fixings supplied by others.

TIMBER STUD WALL 11

FIRE RATED PLASTERBOARD WALL SYSTEM

	DESCRIPTION
1	16mm fire rated plasterboard.
2	16mm fire rated plasterboard lining aperture.
3	Timber stud / noggin min 70mm thick.
4	Each angle fixed to damper casing with minimum 8g x 15mm steel self-drilling screw at 100mm centres or at least 2 per side.
5	0.6mm (min) Z275 galvanised steel angles to all four sides. Angle dimension shall be continuous and at least 2 x the dimension of the gap between damper casing and the penetrated element.
6	Z275 galvanised steel casing minimum thickness 0.6mm.
7	Lorient LVH44 intumescent fire damper screw fixed into casing.
8	Casing terminates with breakaway joints, as per AS1682.2.
9	Fire damper perimeter sealed with Lorient intumescent sealant.
10	LVH44 fixed to casing with 2 x 8g x 25mm self drilling screw on all 4 sides at 100mm centres.
11	Gap between casing and aperture filled with Lorient intumescent sealant. Backing rod used as required to control sealant fill depth to at least 25mm. Maximum annular gap between casing and wall 25mm.

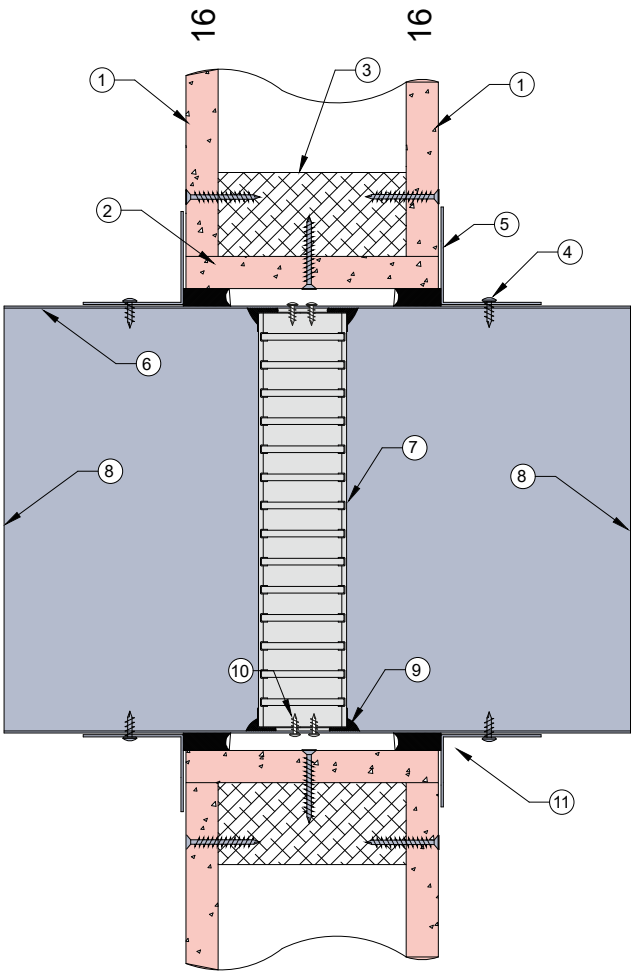

LVH44 in steel casing penetrating fire rated Plasterboard wall

FRL -/90/30

Fire Resistance in accordance with

AS1530.4 2014

Approval Ref

EXOVA EWFA 33233400

Max single cell size

600mm x 600mm

INSTALLATION INSTRUCTIONS

- Line out the wall opening to accept the fire damper, as shown in this system detail.
- Centralise the damper casing and firestop the gap between the casing and wall with Lorient intumescent sealant, see point 11 for fill details.
- Perimeter angles are mechanically fixed to casing with steel self drilling screws as detailed in points 4 & 5.
- Ductwork shall be connected with breakaway joints, as per point 8.
- Ensure product identification labels are conspicuously positioned for easy identification.
- Ensure convenient access is provided to allow for AS1851 inspection and maintenance routines.
- Note: Damper casings, angles and fixings supplied by others.

TIMBER STUD WALL 12

FIRE RATED PLASTERBOARD WALL SYSTEM

	DESCRIPTION
1	2 x 13mm fire rated plasterboard.
2	2 x 13mm fire rated plasterboard lining aperture.
3	Timber stud framing out aperture.
4	Each angle fixed to damper casing with minimum 8g x 15mm steel self-drilling screw at 100mm centres or at least 2 per side.
5	0.6mm (min) Z275 galvanised steel angles to all four sides. Angle dimension shall be continuous and at least 2 x the dimension of the gap between damper casing and the penetrated element.
6	Z275 galvanised steel casing minimum thickness 0.6mm.
7	Lorient LVH44 intumescent fire damper screw fixed into casing.
8	Casing terminates with breakaway joints, as per AS1682.2.
9	Fire damper perimeter sealed with Lorient intumescent sealant.
10	LVH44 fixed to casing with 2 x 8g x 25mm self drilling screw on all 4 sides at 100mm centres.
11	Gap between casing and aperture filled with Lorient intumescent sealant. Backing rod used as required to control sealant fill depth to at least 25mm.Maximum annular gap between casing and wall 25mm.

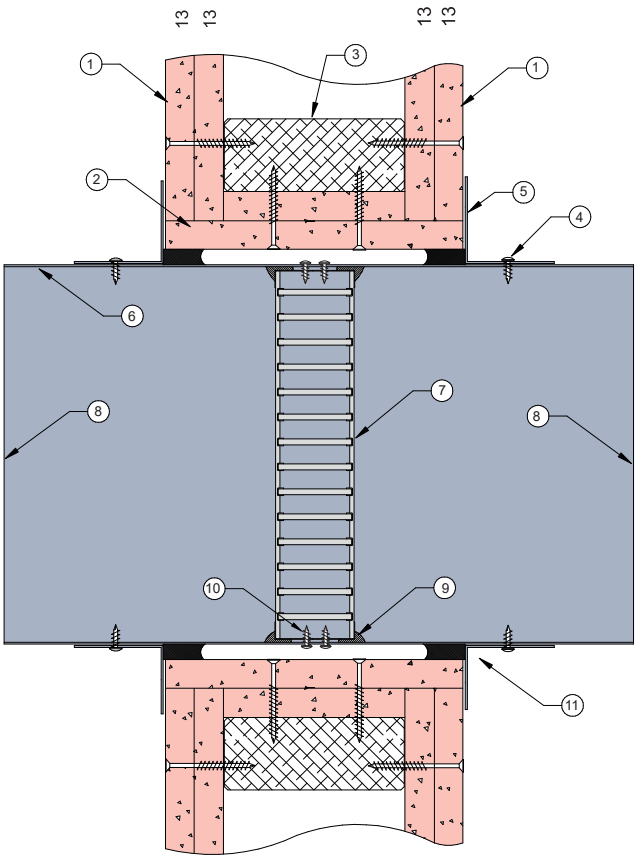

LVH44 in steel casing penetrating fire rated Plasterboard wall

FRL -/120/30

Fire Resistance in accordance with

AS1530.4 2014

Approval Ref

EXOVA EWFA 33233400

Max single cell size

600mm x 600mm

INSTALLATION INSTRUCTIONS

- Line out the wall opening to accept the fire damper, as shown in this system detail.
- Centralise the damper casing and firestop the gap between the casing and wall with Lorient intumescent sealant, see point 11 for fill details.
- Perimeter angles are mechanically fixed to casing with steel self drilling screws as detailed in points 4 & 5.
- Ductwork shall be connected with breakaway joints, as per point 8.
- Ensure product identification labels are conspicuously positioned for easy identification.
- Ensure convenient access is provided to allow for AS1851 inspection and maintenance routines.
- Note: Damper casings, angles and fixings supplied by others.

TIMBER STUD WALL 13

FIRE RATED PLASTERBOARD WALL SYSTEM

	DESCRIPTION
1	2 x 16mm fire rated plasterboard.
2	2 x 16mm fire rated plasterboard lining aperture.
3	Timber stud framing out aperture.
4	Each angle fixed to damper casing with minimum 8g x 15mm steel self-drilling screw at 100mm centres or at least 2 per side.
5	0.6mm (min) Z275 galvanised steel angles to all four sides. Angle dimension shall be continuous and at least 2 x the dimension of the gap between damper casing and the penetrated element.
6	Z275 galvanised steel casing minimum thickness 0.6mm.
7	Lorient LVH44 intumescent fire damper screw fixed into casing.
8	Casing terminates with breakaway joints, as per AS1682.2.
9	Fire damper perimeter sealed with Lorient intumescent sealant.
10	LVH44 fixed to casing with 2 x 8g x 25mm self drilling screw on all 4 sides at 100mm centres.
11	Gap between casing and aperture filled with Lorient intumescent sealant. Backing rod used as required to control sealant fill depth to at least 25mm. Maximum annular gap between casing and wall 25mm.

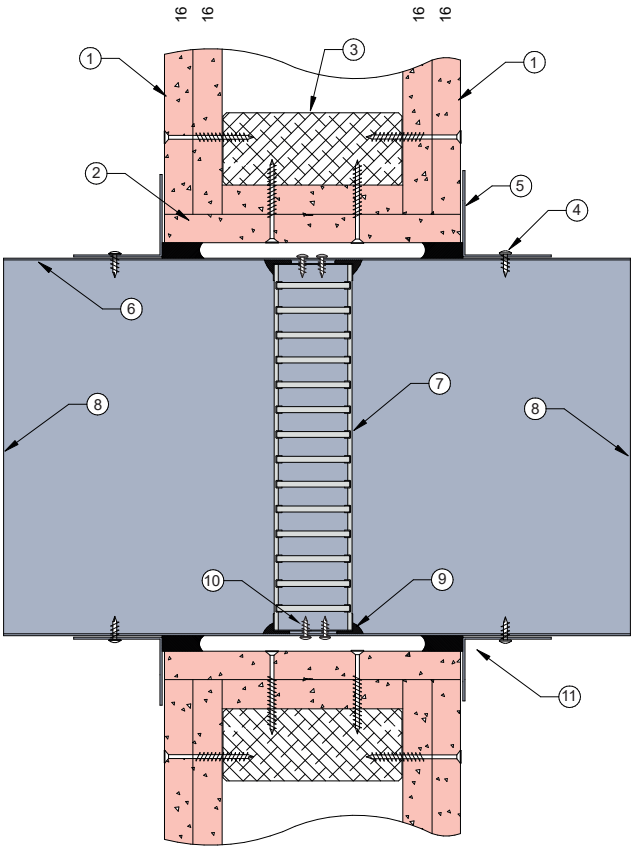

LVH44 in steel casing penetrating fire rated Plasterboard wall

FRL -/120/30

Fire Resistance in accordance with

AS1530.4 2014

Approval Ref

EXOVA EWFA 33233400

Max single cell size

600mm x 600mm

INSTALLATION INSTRUCTIONS

- Line out the wall opening to accept the fire damper, as shown in this system detail.
- Centralise the damper casing and firestop the gap between the casing and wall with Lorient intumescent sealant, see point 11 for fill details.
- Perimeter angles are mechanically fixed to casing with steel self drilling screws as detailed in points 4 & 5.
- Ductwork shall be connected with breakaway joints, as per point 8.
- Ensure product identification labels are conspicuously positioned for easy identification.
- Ensure convenient access is provided to allow for AS1851 inspection and maintenance routines.
- Note: Damper casings, angles and fixings supplied by others.

STUD WALL 14 TIGHT TO SLAB

FIRE RATED PLASTERBOARD WALL SYSTEM

	DESCRIPTION
1D	13mm fire rated plasterboard.
2	Lorient LVH44 intumescent fire damper.
3	Angles fixed to wall and steel framing with minimum 6-18x40mm D or S type steel screw at 100mm centres or at least 2 per side.
4	0.6mm (min) Z275 galvanised steel angles to all four sides. Angle dimensions shall be continuous and at least 2 x the dimension of the gap between damper casing and the penetrated element. Each Angles fixed to damper casing with minimum 8g x 15mm steel self-drilling screw.
5	Z275 galvanised steel casing min thickness 0.6mm.
6	LVH44 fixed to casing with 2 x 8g x 25mm self drilling screw on all 4 sides at 100mm centres.
7	Fire damper perimeter sealed with Lorient intumescent sealant.
8	Gap between casing and aperture filled full depth (at least 50mm depth) with Lorient intumescent sealant. Maximum annular gap between casing and wall is 25mm.
9	Casing terminates with breakaway joint as per AS1682.2
10	100mm wide x min 25mm think non-combustible (with FRL -/120/120) or 100mm x 50mm thick TBA Firefly Intubatt bedded in intumescent sealant and running full width of the aperture. Block mechanically fixed to slab with expanding steel anchors (e.g Dynabolt or similar).

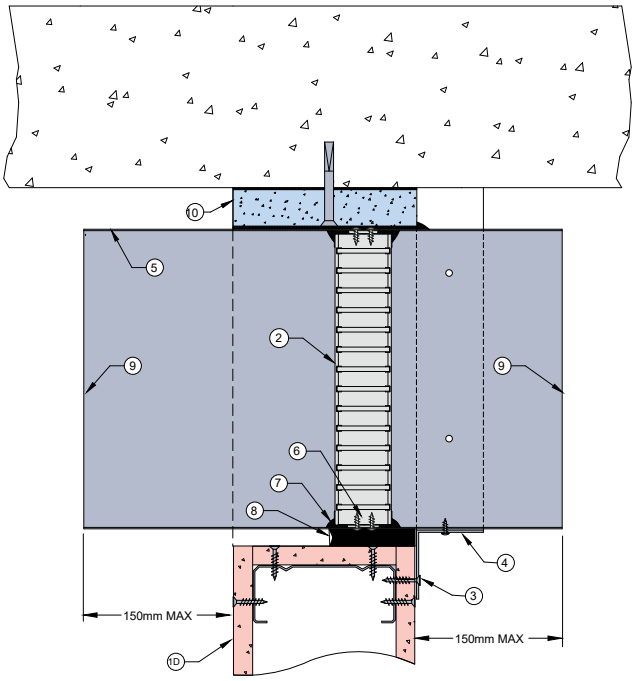

LVH44 in steel casing penetrating fire rated Plasterboard wall – tight to slab

FRL -/60/30

Fire Resistance in accordance with

AS1530.4 2014

Approval Ref

EXOVA EWFA 33233400

Max size

600mm x 600mm

INSTALLATION INSTRUCTIONS

- Prepare the wall opening to accept the fire damper and install in wall, as shown in this system detail.
- Non-combustible or TBA Intubatt block is fixed to slab, as per point 10.
- Lorient intumescent sealant liberally applied to block and duct containing damper is positioned and pushed up tight to block.
- Firestop the gap between the casing and wall with Lorient intumescent sealant, note fill details in point 8.
- 3 off perimeter angles are mechanically fixed to bottom and sides of casing with steel self drilling screws and fixed to wall with drywall needle point screw, as detailed in point 3.
- Ductwork shall be connected with breakaway joints, as per point 9.
- Ensure product identification labels are conspicuously positioned for easy identification.
- Ensure convenient access is provided to allow for AS1851 inspection and maintenance routines.
- Note: Damper casings, angles and fixings supplied by others.

STUD WALL 15 TIGHT TO SLAB

FIRE RATED PLASTERBOARD WALL SYSTEM

	DESCRIPTION
1E	16mm fire rated plasterboard.
2	Lorient LVH44 intumescent fire damper.
3	Angles fixed to wall and steel framing with minimum 6-18x40mm D or S type steel screw at 100mm centres or at least 2 per side.
4	0.6mm (min) Z275 galvanised steel angles to all four sides. Angle dimensions shall be continuous and at least 2 x the dimension of the gap between damper casing and the penetrated element. Each Angles fixed to damper casing with minimum 8g x 15mm steel self-drilling screw at 100mm centre or at least 2 per side.
5	Z275 galvanised steel casing min thickness 0.6mm.
6	LVH44 fixed to casing with 2 x 8g x 25mm self drilling screw on all 4 sides at 100mm centres.
7	Fire damper perimeter sealed with Lorient intumescent sealant.
8	Gap between casing and aperture filled full depth (at least 50mm depth) with Lorient intumescent sealant. Maximum annular gap between casing and wall is 25mm.
9	Casing terminates with breakaway joint as per AS1682.2
10	100mm wide x min 25mm think non-combustible (with FRL -/120/120) or 100mm x 50mm thick TBA Firefly Intubatt bedded in minimum 1mm layer intumescent sealant and running full width of the aperture. Block mechanically fixed to slab with expanding steel anchors (e.g Dynabolt or similar).

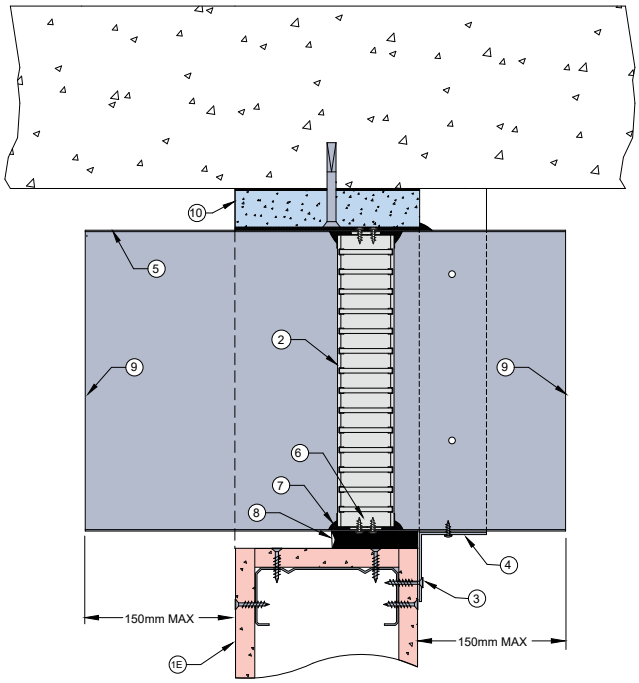

LVH44 in steel casing penetrating fire rated Plasterboard wall – tight to slab

FRL -/90/30

Fire Resistance in accordance with

AS1530.4 2014

Approval Ref

EXOVA EWFA 33233400

Max size

600mm x 600mm

INSTALLATION INSTRUCTIONS

- Prepare the wall opening to accept the fire damper and install in wall, as shown in this system detail.
- Non-combustible TBA Intubatt block is fixed to slab, as per point 10.
- Lorient intumescent sealant liberally applied to block and duct containing damper is positioned and pushed up tight to block.
- Firestop the gap between the casing and wall with Lorient intumescent sealant, note fill details in point 8.
- 3 off perimeter angles are mechanically fixed to bottom and sides of casing with steel self drilling screws and fixed to wall with drywall needle point screw, as detailed in point 3.
- Ductwork shall be connected with breakaway joints, as per point 9.
- Ensure product identification labels are conspicuously positioned for easy identification.
- Ensure convenient access is provided to allow for AS1851 inspection and maintenance routines.
- Note: Damper casing, angles and fixings supplied by others.

STUD WALL 16 TIGHT TO SLAB

FIRE RATED PLASTERBOARD WALL SYSTEM

	DESCRIPTION
1F	2 x layers of 13mm or
1G	2 x layers of 16mm fire rated plasterboard
2	Lorient LVH44 intumescent fire damper.
3	Angles fixed to wall and steel framing at 100mm centres or at least 2 per side. Fixings: 2 x 13mm: minimum 6-18x40mm D or S type steel screw 2 x 16mm: minimum 6-18x45mm D or S type steel screw
4	0.6mm (min) Z275 galvanised steel angles to all four sides. Angle dimensions shall be continuous and at least 2 x the dimension of the gap between damper casing and the penetrated element. Each Angles fixed to damper casing with minimum 8g x 15mm steel self-drilling screw at 100mm centre or at least 2 per side.
5	Z275 galvanised steel casing min thickness 0.6mm.
6	LVH44 fixed to casing with 2 x 8g x 25mm self drilling screw on all 3 sides at 100mm centres.
7	Fire damper perimeter sealed with Lorient intumescent sealant.
8	Gap between casing and aperture filled full depth (at least 50mm depth) with Lorient intumescent sealant. Maximum annular gap between casing and wall is 25mm.
9	Casing terminates with breakaway joint as per AS1682.2
10	100mm wide x min 25mm think non-combustible (with FRL -/120/120) or 100mm x 50mm thick TBA Firefly Intubatt bedded in minimum 1mm layer of intumescent sealant and running full width of the aperture. Block mechanically fixed to slab with expanding steel anchors (e.g Dynabolt or similar).

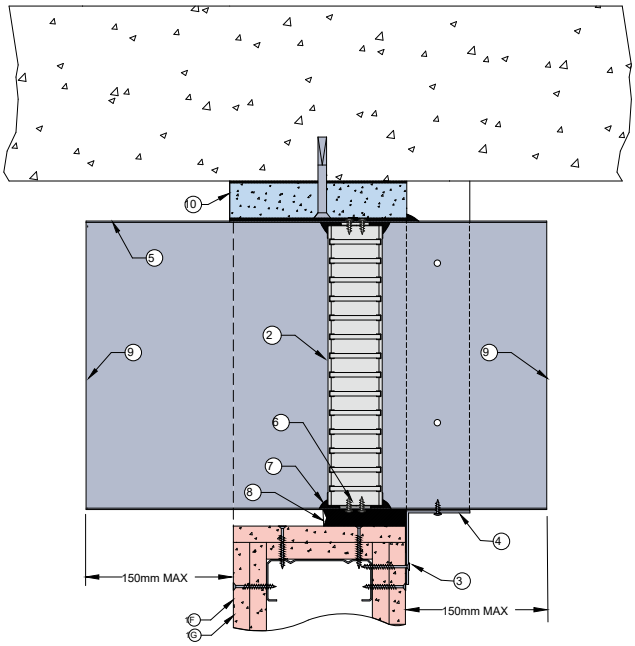

LVH44 in steel casing penetrating fire rated Plasterboard wall – tight to slab

FRL -/120/30

Fire Resistance in accordance with

AS1530.4 2014

Approval Ref

EXOVA EWFA 33233400

Max size

600mm x 600mm

INSTALLATION INSTRUCTIONS

- Prepare the wall opening to accept the fire damper and install in wall, as shown in this system detail.
- Non-combustible or Intubatt block is fixed to slab, as per point 10.
- Lorient intumescent sealant liberally applied to block and duct containing damper is positioned and pushed up tight to block.
- Firestop the gap between the casing and wall with Lorient intumescent sealant, note fill details in point 8.
- 3 off perimeter angles are mechanically fixed to bottom and sides of casing with steel self drilling screws and fixed to wall with drywall needle point screw, as detailed in point 3.
- Ductwork shall be connected with breakaway joints, as per point 9.
- Ensure product identification labels are conspicuously positioned for easy identification.
- Ensure convenient access is provided to allow for AS1851 inspection and maintenance routines.
- Note: Damper casings, angles and fixings supplied by others.

SHAFT WALL 1

FIRE RATED PLASTERBOARD SHAFT WALL SYSTEM

	DESCRIPTION
1	25mm fire rated plasterboard shaft wall liner.
2	16mm fire rated plasterboard.
3	25mm fire rated shaft liner fully lining the aperture.
4	Steel CH section or J track used to line all sides of aperture.
5	0.6mm (min) Z275 Gal steel angles to all four sides. Angle dimensions shall be continuous and at least 2 x the dimension of the gap between the damper casing and the penetrated element. Each angle fixed into: Casing: Wafer button head screws 6g x 16mm (max. 150mm centres) Studs: Bugle head needle point screws 6g x 40mm (max. 100mm centres)
6	Z275 galvanised steel casing minimum thickness 0.6mm.
7	Lorient LVH44 intumescent fire damper screw fixed into casing.
8	Casing terminates with breakaway joints as per AS1682.2.
9	Fire damper perimeter sealed with Lorient intumescent sealant.
10	Fire damper fixed to casing with 2 x steel wafer head screws (10g x 22mm 100mm centres).
11	Gap between casing and aperture filled with Lorient intumescent sealant. Backing rod used as required to control depth to 40mm deep. The gap between casing and wall shall be between 15-25mm
12	2 layers of 100mm x 16mm plasterboard support pad. Fitted with Bugle head needle point screws 6g x 40mm no more than 100mm centre.
13	Plasterboard support pad treatment – 5mm of Lorient intumescent sealant.

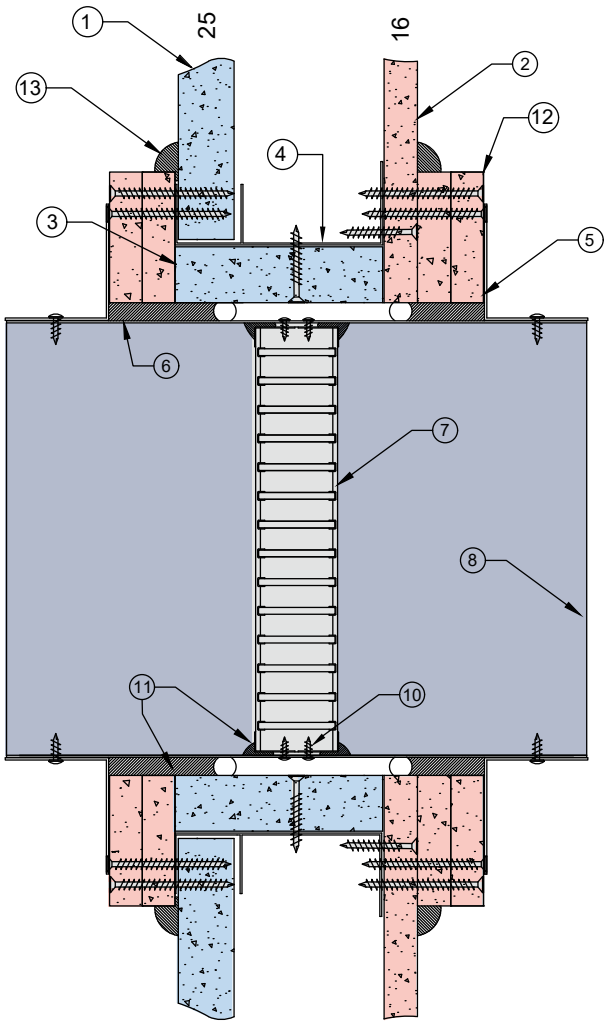

LVH44 in steel casing penetrating fire rated Plasterboard Shaft wall

FRL Up to -/60/60

Fire Resistance in accordance with

AS1530.4 2014

Approval Ref

CSIRO FCO 3487

Max single cell size

450mm x 450mm

INSTALLATION INSTRUCTIONS

- Line out the wall opening to accept the fire damper, as shown in this system detail.
- Centralise the damper casing and firestop the gap between gap and casing and wall with Lorient intumescent sealant, see point 11 for fill details.
- Perimeter angles are mechanically fixed to casing and to wall with screws specified in points 5.
- Ductwork shall be connected with breakaway joints, as per point 8.
- Ensure product identifications labels are conspicuously positioned for easy identification.
- Ensure convenient access is provided to allow for AS1851 inspection and maintenance routines.
- Note: Damper casings, angles and fixings supplied by others.

SHAFT WALL 2

FIRE RATED PLASTERBOARD SHAFT WALL SYSTEM

	DESCRIPTION
1	25mm fire rated plasterboard shaft wall liner.
2	2 x 16mm fire rated plasterboard.
3	25mm fire rated shaft liner fully lining the aperture.
4	Steel CH section or J track used to line all sides of aperture.
5	0.6mm (min) Z275 Gal steel angles to all four sides. Angle dimensions shall be continuous and at least 2 x the dimension of the gap between the damper casing and the penetrated element. Each angle fixed into: Casing: Wafer button head screws 6g x 16mm (max. 150mm centres). Studs: Bugle head needle point screws 6g x 40mm (max. 100mm centres).
6	Z275 galvanised steel casing minimum thickness 0.6mm.
7	Lorient LVH44 intumescent fire damper screw fixed into casing.
8	Casing terminates with breakaway joints as per AS1682.2.
9	Fire damper perimeter sealed with Lorient intumescent sealant.
10	Fire damper fixed to casing with 2 x steel wafer head screws (10g x 22mm 100mm centres).
11	Gap between casing and aperture filled with Lorient intumescent sealant. Backing rod used as required to control depth to 40mm deep. The gap between casing and wall shall be between 15-25mm.
12	1 layer of 100mm x 16mm plasterboard support pad. Fitted with Bugle head needle point screws 6g x 40mm no more than 100mm centre.
13	Plasterboard support pad treatment – 5mm of Lorient intumescent sealant.

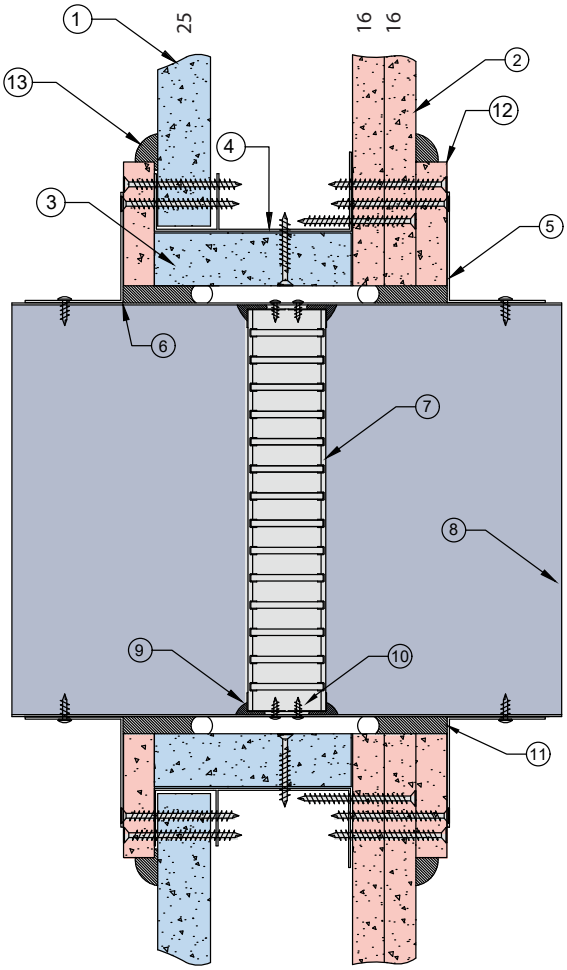

LVH44 in steel casing penetrating fire rated Plasterboard Shaft wall

FRL Up to -/120/120

Fire Resistance in accordance with

AS1530.4 2014

Approval Ref

CSIRO FCO-3487

Max single cell size

450mm x 450mm

INSTALLATION INSTRUCTIONS

- Line out the wall opening to accept the fire damper, as shown in system detail.
- Centralise the damper casing and firestop the gap between the casing and wall with Lorient intumescent sealant, see point 11 for fill details.
- Perimeter angles are mechanically fixed to casing with steel self drilling screws and to wall with appropriate length needle point drywall screws, as detailed in point 5.
- Ductwork shall be connected with breakaway joints, as per point 8.
- Ensure product identification labels are conspicuously positioned for easy identification.
- Ensure convenient access is provided to allow for AS1851 inspection and maintenance routines.
- Note: Damper casings, angles and fixings supplied by others.

SHAFT WALL 3

FIRE RATED PLASTERBOARD SHAFT WALL SYSTEM

	DESCRIPTION
1	25mm fire rated plasterboard shaft wall liner.
2	2 x 13mm fire rated plasterboard.
3	25mm fire rated shaft liner fully lining the aperture.
4	Steel CH section or J track used to line all sides of aperture.
5	0.6mm (min) Z275 Gal steel angles to all four sides. Angle dimensions shall be continuous and at least 2 x the dimension of the gap between the damper casing and the penetrated element. Each angle fixed into: Casing: Wafer button head screws 6g x 16mm (max. 150mm centres) Studs: Bugle head needle point screws 6g x 40mm (max. 100mm centres)
6	Z275 galvanised steel casing minimum thickness 0.6mm.
7	Lorient LVH44 intumescent fire damper screw fixed into casing.
8	Casing terminates with breakaway joints as per AS1682.2.
9	Fire damper perimeter sealed with Lorient intumescent sealant.
10	Fire damper fixed to casing with 2 x steel wafer head screws (10g x 22mm 100mm centres).
11	Gap between casing and aperture filled with Lorient intumescent sealant. Backing rod used as required to control depth to 40mm deep. The gap between casing and wall shall be between 15-25mm
12	1 layer of 100mm x 16mm plasterboard support pad. Fitted with Bugle head needle point screws 6g x 40mm no more than 100mm centre.
13	Plasterboard support pad treatment – 5mm of Lorient intumescent sealant.

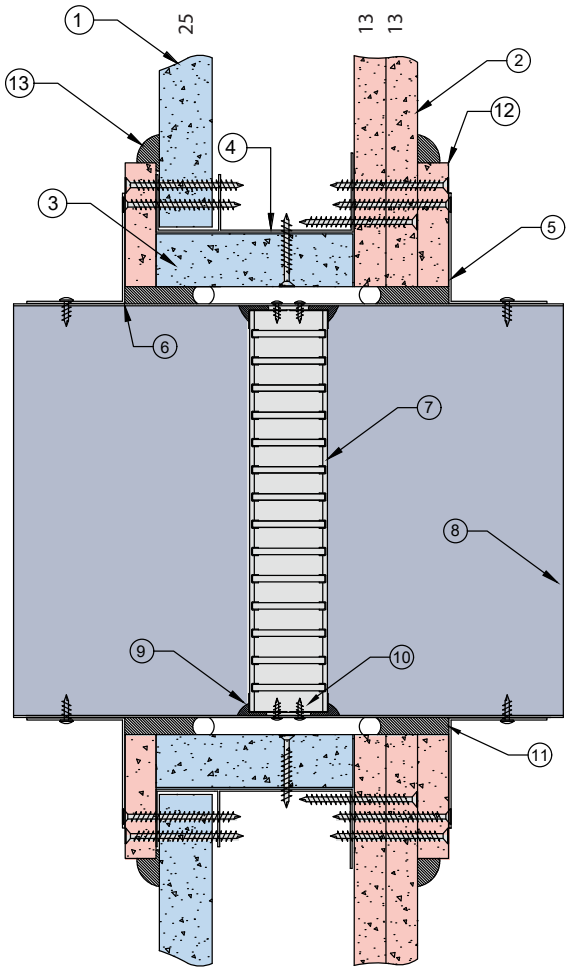

LVH44 in steel casing penetrating fire rated Plasterboard Shaft wall

FRL Up to -/90/90

Fire Resistance in accordance with

AS1530.4 2014

Approval Ref

CSIRO FCO 3487

Max single cell size

450mm x 450mm

INSTALLATION INSTRUCTIONS

- Line out the wall opening to accept the fire damper, as shown in this system detail.
- Centralise the damper casing and firestop the gap between gap and casing and wall with Lorient intumescent sealant, see point 11 for fill details.
- Perimeter angles are mechanically fixed to casing and to wall with screws specified in points 5.
- Ductwork shall be connected with breakaway joints, as per point 8.
- Ensure product identifications labels are conspicuously positioned for easy identification.
- Ensure convenient access is provided to allow for AS1851 inspection and maintenance routines.
- Note: Damper casings, angles and fixings supplied by others.

SHAFT WALL 4

FIRE RATED PLASTERBOARD SHAFT WALL SYSTEM

	DESCRIPTION
1	3 x 13mm or 3 x 16mm fire rated plasterboard.
2	40mm x 40mm 0.6mm Z275 steel angle fixed through wall with 8g-15 x 60mm long needle point drywall screw at 100mm centre or at least 2 per side.
3	40mm x 40mm x 0.6mm Z275 galvanised steel angles to all four sides. Each Angles fixed to damper casing with minimum 8g x 15mm steel self-drilling screw at 100mm centres or at least 2 per side.
4	Z275 galvanised steel casing minimum thickness 0.6mm.
5	Lorient LVH44 intumescent fire damper screw fixed into casing.
6	Casing terminates with breakaway joints, as per AS1682.2.
7	Fire damper perimeter sealed with Lorient intumescent sealant.
8	LVH44 fixed to casing with 2 x 8g x 25mm self drilling screw on all 4 sides at 100mm centres.
9	Gap between casing and aperture filled with Lorient intumescent sealant. Maximum annular gap between casing and wall 25mm.

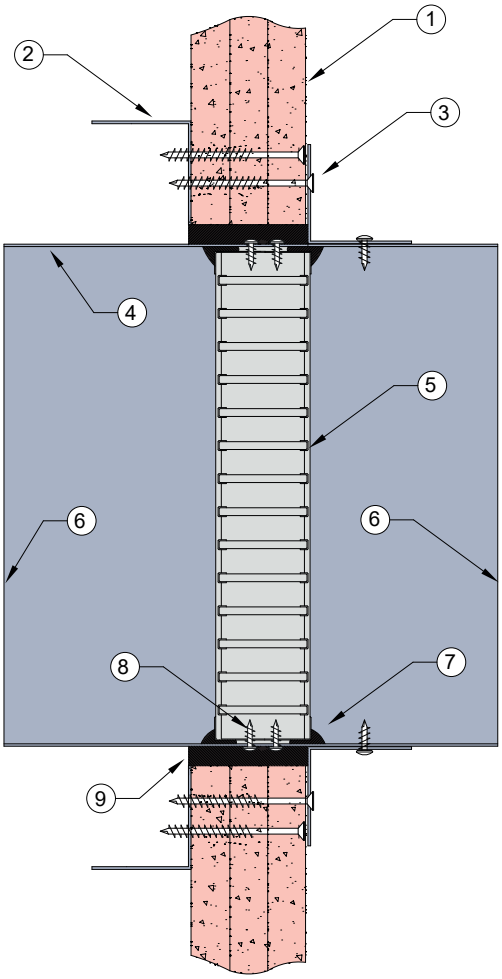

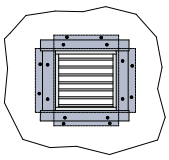

Rondo 40 x 40mm equal angle fixed around aperture to provide anchor point for fixing angle brackets 4 off fixing angles required as shown.

LVH44 in steel casing penetrating fire rated laminated Plasterboard Shaft wall

FRL -/120/-

Fire Resistance in accordance with

AS1530.4 2014

Approval Ref

EXOVA EWFA 33233400

Max single cell size

600mm x 600mm

INSTALLATION INSTRUCTIONS

- Prepare the wall opening to accept the fire damper and install in wall, as shown in system detail.
- Fix reinforcing angles to inside of wall as shown above. Fix angle brackets to damper casing, as per point 2 & 3.
- Centralise in aperture and mechanically fix through wall into opposing angle. Firestop the gap between the casing and wall with Lorient intumescent sealant, note fill details in point 9.
- Ductwork shall be connected with breakaway joints, as per point 6.
- Ensure product identification labels are conspicuously positioned for easy identification.
- Ensure convenient access is provided to allow for AS1851 inspection and maintenance routines.
- Note: Damper casings, angles and fixings supplied by others.

SHAFT WALL 5

FIRE RATED PLASTERBOARD SHAFT WALL SYSTEM

	DESCRIPTION
1	3 x 13mm or 3 x 16mm fire rated plasterboard.
2	40mm x 40mm x 0.6mm Z275 galvanised steel reinforcing angles fixed into wall with 8g-15 x 60mm long needle point drywall screw.
3	40mm x 40mm x 0.6mm Z275 galvanised steel angles to all four sides. Each angles fixed to damper casing with minimum 8gx 15mm steel self-drilling screw.
4	Z275 galvanised steel casing minimum thickness 0.6mm.
5	Lorient LVH44C circular intumescent fire damper screw fixed into casing.
6	Casing terminates with breakaway joints, as per AS1682.2.
7	Fire damper perimeter sealed with Lorient intumescent sealant.
8	LVH44 fixed to casing with 2 x 8g x 25mm self drilling screw on all 4 sides at 100mm centres.
9	Gap between casing and aperture filled with Lorient intumescent sealant. Backing rod used as required to control sealant fill depth. Maximum annular gap between casing and wall 25mm.

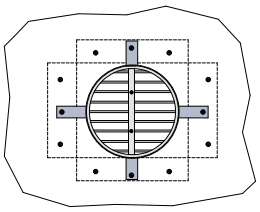

Rondo 40mm x 40mm equal angle fixed around aperture to provide anchor point for fixing angle brackets 4 off fixing angles required as shown.

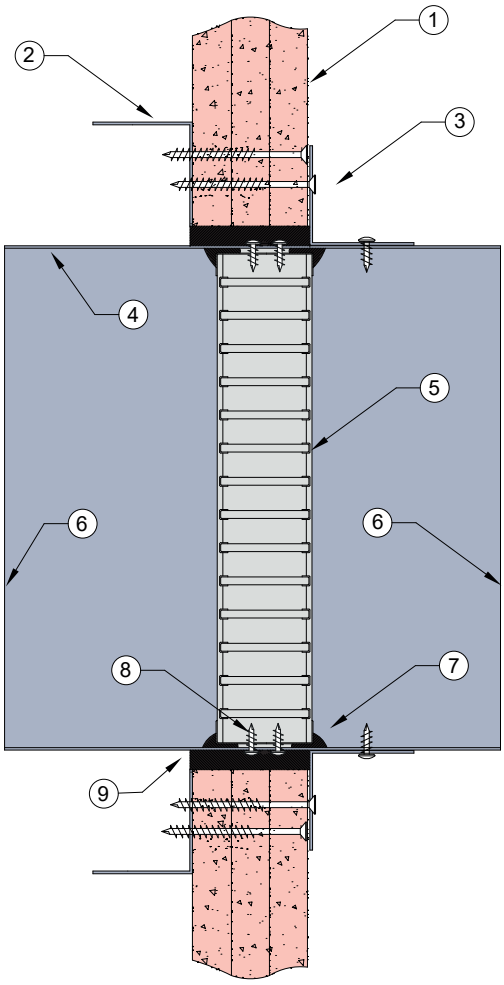

LVH44C in steel casing penetrating fire rated Plasterboard Shaft wall

FRL -/120/-

Fire Resistance in accordance with

AS1530.4 2014

Approval Ref

EXOVA EWFA 33233400

Max size

450mm diameter

INSTALLATION INSTRUCTIONS

- Prepare the wall opening to accept the fire damper and install in wall, as shown in system detail.
- Fix reinforcing angles to inside of wall as shown above. Fix angle brackets to damper casing, as per point 2 & 3.
- Centralise in aperture and mechanically fix through wall into opposing angle. Firestop the gap between the casing and wall with Lorient intumescent sealant, note fill details in point 9.
- Ductwork shall be connected with breakaway joints, as per point 6.
- Ensure product identification labels are conspicuously positioned for easy identification.
- Ensure convenient access is provided to allow for AS1851 inspection and maintenance routines.
- Note: Fixings and angles supplied by others.

SHAFT WALL ANGLE FREE 1

FIRE RATED MASONRY / CONCRETE SHAFT WALL SYSTEM

	DESCRIPTION
1A 1B	Masonry or concrete wall (minimum 75mm or thicker in accordance to AS3600 or AS3700 to achieve required FRL).
2	Lorient LVH44 intumescent fire damper.
2A	Lorient LVH44C intumescent fire damper.
3	Protected sheet metal riser.
4	Horizontal branch connected to riser with steel fixings or pop rivets.
5	Z275 galvanised steel branch min thickness 0.6mm.
6	Damper fixed to casing with 2 x 8g x 25mm self drilling screw on all 4 sides at 100mm centres.
7	Fire damper perimeter sealed with Lorient intumescent sealant.
8	Gap between casing and aperture filled with Lorient intumescent sealant. Backing rod used as required to control sealant fill depth to at least 50mm. Maximum annular gap between casing and wall is 25mm.
9	Casing terminates with breakaway joint as per AS1682.2.

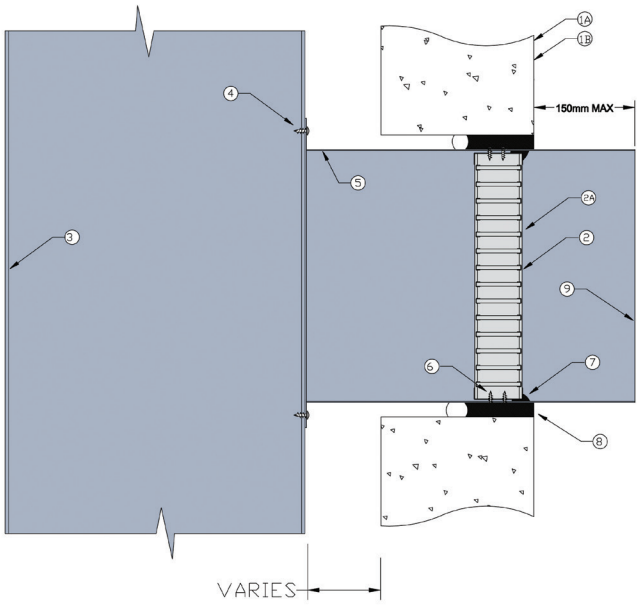

Angle free LVH44 or LHV44C in steel casing connected to sheet metal riser penetrating fire rated Masonry or Concrete shaft wall

FRL -/120/30

Fire Resistance in accordance with

AS1530.4 2014

Approval Ref

EXOVA EWFA 33233400

Max single cell size

600mm x 600mm or 450mm diameter

INSTALLATION INSTRUCTIONS

- Measure and mark the position of the damper in the horizontal branch, ensuring that it will be aligned within the shaft wall once the branch is attached to the riser and the shaft wall is constructed.
- Fix damper into branch with steel screws (point 6) and seal perimeter with Lorient intumescent sealant (point 7).
- Mechanically fix the branch to the vertical riser with steel screws or pop rivets (point 4).
- Once shaft wall has been constructed, firestop the gap between the casing and the wall with Lorient intumescent sealant – note fill depth details in point 8.
- Ductwork shall be connected with breakaway joints, as per point 9.
- Ensure product identification labels are conspicuously positioned for easy identification.
- Ensure convenient access is provided to allow for AS1851 inspection and maintenance routines.
- Note: Branch / casing and fixings supplied by others.

SHAFT WALL ANGLE FREE 2

FIRE RATED HEBEL®
SHAFT WALL SYSTEM

	DESCRIPTION
1C	Hebel® wall minimum 75mm thick.
2	Lorient LVH44 intumescent fire damper.
2A	Lorient LVH44C intumescent fire damper.
3	Protected sheet metal riser.
4	Horizontal branch connected to riser with steel fixings or pop rivets.
5	Z275 galvanised steel branch min thickness 0.6mm.
6	Damper fixed to casing with 2 x 8g x 25mm self drilling screw on all 4 sides at 100mm centres.
7	Fire damper perimeter sealed with Lorient intumescent sealant.
8	Gap between casing and aperture filled with Lorient intumescent sealant. Backing rod used as required to control sealant fill depth to at least 50mm. Maximum annular gap between casing and wall is 25mm.
9	Casing terminates with breakaway joint as per AS1682.2.

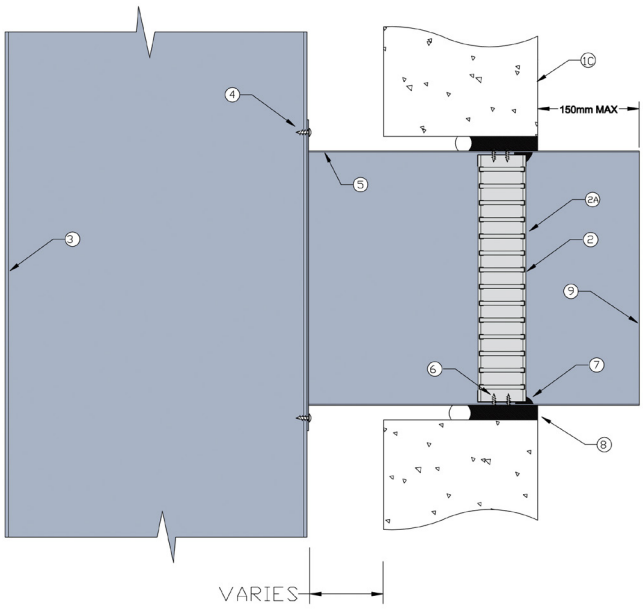

Angle free LVH44 or LHV44C in steel casing connected to sheet metal riser penetrating fire rated Hebel® shaft wall

FRL -/120/30

Fire Resistance in accordance with

AS1530.4 2014

Approval Ref

EXOVA EWFA 33233400

Max single cell size

600mm x 600mm or 450mm diameter

INSTALLATION INSTRUCTIONS

- Measure and mark the position of the damper in the horizontal branch, ensuring that it will be aligned within the shaft wall once the branch is attached to the riser and the shaft wall is constructed.
- Fix damper into branch with steel screws (point 6) and seal perimeter with Lorient intumescent sealant (point 7).
- Mechanically fix the branch to the vertical riser with steel screws or pop rivets (point 4).
- Once shaft wall has been constructed, firestop the gap between the casing and the wall with Lorient intumescent sealant – note fill depth details in point 8.
- Ductwork shall be connected with breakaway joints, as per point 9.
- Ensure product identification labels are conspicuously positioned for easy identification.
- Ensure convenient access is provided to allow for AS1851 inspection and maintenance routines.
- Note: Branch / casing and fixings supplied by others.

SHAFT WALL ANGLE FREE 3

FIRE RATED PLASTERBOARD SHAFT WALL SYSTEM

	DESCRIPTION
1D	13mm fire rated plasterboard wall.
2	Lorient LVH44 intumescent fire damper.
3	Protected sheet metal riser.
4	Horizontal branch connected to riser with steel fixings or pop rivets.
5	Z275 galvanised steel branch min thickness 0.6mm.
6	LVH44 fixed to casing with 2 x 8g x 25mm self drilling screw on all 4 sides at 100mm centres.
7	Fire damper perimeter sealed with Lorient intumescent sealant.
8	Gap between casing and aperture filled with Lorient intumescent sealant. Backing rod used as required to control sealant fill depth to at least 50mm. Maximum annular gap between casing and wall is 25mm.
9	Casing terminates with breakaway joint as per AS1682.2.

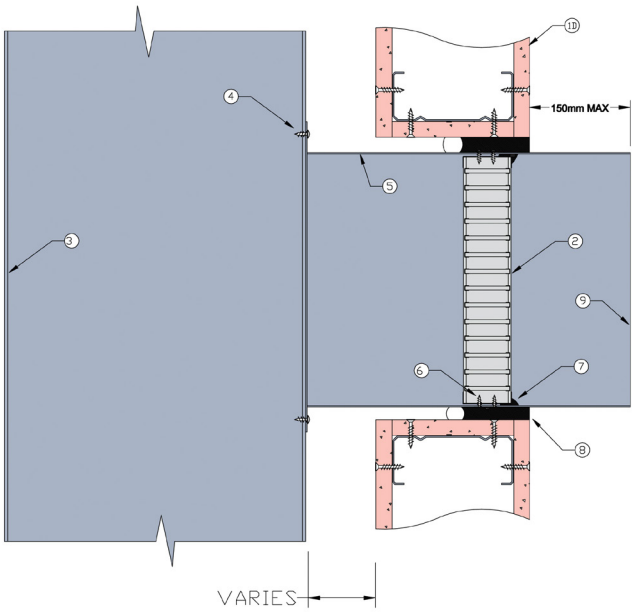

Angle free LVH44 in steel casing connected to sheet metal riser penetrating fire rated Plasterboard shaft wall

FRL -/60/30

Fire Resistance in accordance with

AS1530.4 2014

Approval Ref

EXOVA EWFA 33233400

Max single cell size

600mm x 600mm

INSTALLATION INSTRUCTIONS

- Measure and mark the position of the damper in the horizontal branch, ensuring that it will be aligned within the shaft wall once the branch is attached to the riser and the shaft wall is constructed.
- Fix damper into branch with steel screws (point 6) and seal perimeter with Lorient intumescent sealant (point 7).
- Mechanically fix the branch to the vertical riser with steel screws or pop rivets (point 4).
- Once shaft wall has been constructed, firestop the gap between the casing and the wall with Lorient intumescent sealant – note fill depth details in point 8.
- Ductwork shall be connected with breakaway joints, as per point 9.
- Ensure product identification labels are conspicuously positioned for easy identification.
- Ensure convenient access is provided to allow for AS1851 inspection and maintenance routines.
- Note: Branch / casing and fixings supplied by others.

SHAFT WALL ANGLE FREE 4

FIRE RATED PLASTERBOARD SHAFT WALL SYSTEM

	DESCRIPTION
1E	16mm fire rated plasterboard wall.
2	Lorient LVH44 intumescent fire damper.
3	Protected sheet metal riser.
4	Horizontal branch connected to riser with steel fixings or pop rivets.
5	Z275 galvanised steel branch min thickness 0.6mm.
6	LVH44 fixed to casing with 2 x 8g x 25mm self drilling screw on all 4 sides at 100mm centres.
7	Fire damper perimeter sealed with Lorient intumescent sealant.
8	Gap between casing and aperture filled with Lorient intumescent sealant. Backing rod used as required to control sealant fill depth to at least 50mm. Maximum annular gap between casing and wall is 25mm.
9	Casing terminates with breakaway joint as per AS1682.2.

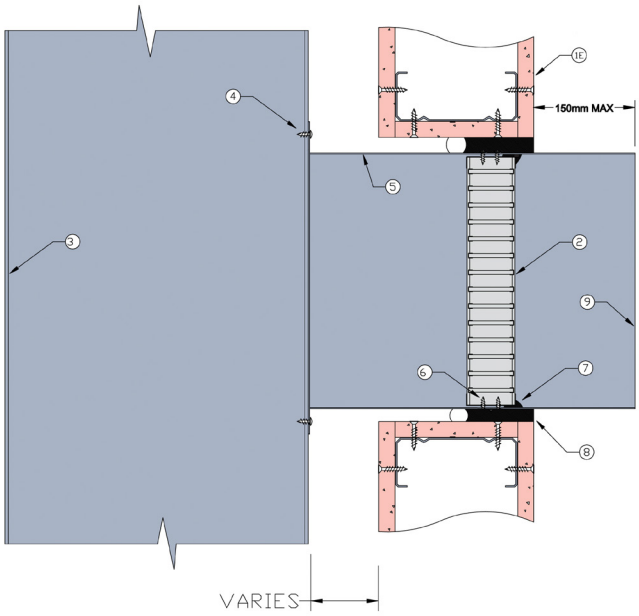

Angle free LVH44 in steel casing connected to sheet metal riser penetrating fire rated Plasterboard shaft wall

FRL -/90/30

Fire Resistance in accordance with

AS1530.4 2014

Approval Ref

EXOVA EWFA 33233400

Max single cell size

600mm x 600mm

INSTALLATION INSTRUCTIONS

- Measure and mark the position of the damper in the horizontal branch, ensuring that it will be aligned within the shaft wall once the branch is attached to the riser and the shaft wall is constructed
- Fix damper into branch with steel screws (point 6) and seal perimeter with Lorient intumescent sealant (point 7).
- Mechanically fix the branch to the vertical riser with steel screws or pop rivets (point 4).
- Once shaft wall has been constructed, firestop the gap between the casing and the wall with Lorient intumescent sealant – note fill depth details in point 8.
- Ductwork shall be connected with breakaway joints, as per point 9.
- Ensure product identification labels are conspicuously positioned for easy identification.
- Ensure convenient access is provided to allow for AS1851 inspection and maintenance routines.
- Note: Branch / casing and fixings supplied by others.

SHAFT WALL ANGLE FREE 5

FIRE RATED PLASTERBOARD SHAFT WALL SYSTEM

	DESCRIPTION
1F	2 x layers of 13mm fire rated plasterboard wall or
1G	2 x layers of 16mm fire rated plasterboard wall.
2	Lorient LVH44 intumescent fire damper.
3	Protected sheet metal riser.
4	Horizontal branch connected to riser with steel fixings or pop rivets.
5	Z275 galvanised steel branch min thickness 0.6mm.
6	LVH44 fixed to casing with 2 x 8g x 25mm self drilling screw on all 4 sides at 100mm centres.
7	Fire damper perimeter sealed with Lorient intumescent sealant.
8	Gap between casing and aperture filled with Lorient intumescent sealant. Backing rod used as required to control sealant fill depth to at least 50mm. Maximum annular gap between casing and wall is 25mm.
9	Casing terminates with breakaway joint as per AS1682.2.

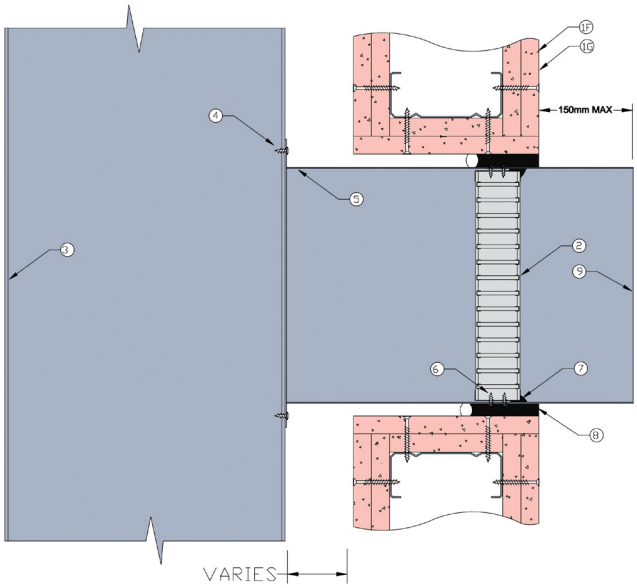

Angle free LVH44 in steel casing connected to sheet metal riser penetrating fire rated Plasterboard shaft wall

FRL -/120/30

Fire Resistance in accordance with

AS1530.4 2014

Approval Ref

EXOVA EWFA 33233400

Max single cell size

600mm x 600mm

INSTALLATION INSTRUCTIONS

- Measure and mark the position of the damper in the horizontal branch, ensuring that it will be aligned within the shaft wall once the branch is attached to the riser and the shaft wall is constructed.
- Fix damper into branch with steel screws (point 6) and seal perimeter with Lorient intumescent sealant (point 7).
- Mechanically fix the branch to the vertical riser with steel screws or pop rivets (point 4).
- Once shaft wall has been constructed, firestop the gap between the casing and the wall with Lorient intumescent sealant – note fill depth details in point 8.
- Ductwork shall be connected with breakaway joints, as per point 9.
- Ensure product identification labels are conspicuously positioned for easy identification.
- Ensure convenient access is provided to allow for AS1851 inspection and maintenance routines.
- Note: Branch / casing and fixings supplied by others.

SHAFT WALL ANGLE FREE 6

FIRE RATED PLASTERBOARD SHAFT WALL SYSTEM

	DESCRIPTION
1J	3 x 13mm fire rated laminated plasterboard or
1K	3 x 16mm fire rated laminated plasterboard.
2	Lorient LVH44 or LVH44C intumescent fire damper.
3	Protected sheet metal riser.
4	Horizontal branch connected to riser with steel fixings or pop rivets.
5	Z275 galvanised steel branch min thickness 0.6mm.
6	LVH44 fixed to casing with 2 x 8g x 25mm self drilling screw on all 4 sides at 100mm centres.
7	Fire damper perimeter sealed with Lorient intumescent sealant.
8	Gap between casing and aperture filled full depth with Lorient intumescent sealant. Maximum annular gap between casing and wall is 25mm.
9	Casing terminates with breakaway joint as per AS1682.2.

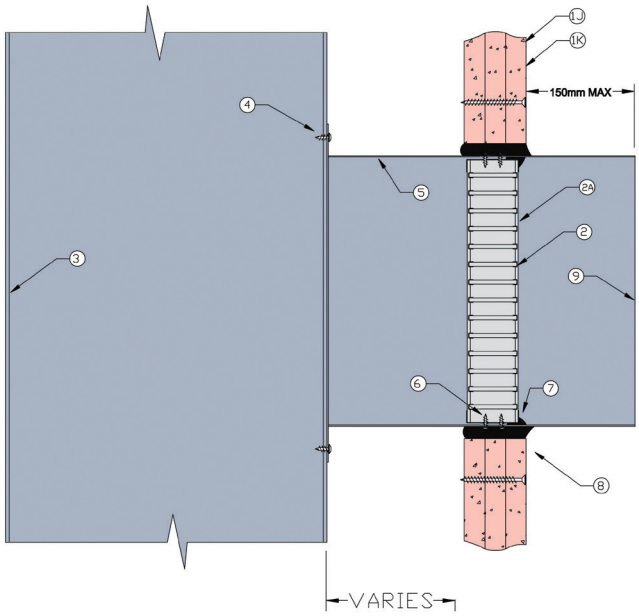

Angle free LVH44 in steel casing connected to sheet metal riser penetrating fire rated laminated Plasterboard shaft wall

FRL -/120/-

Fire Resistance in accordance with

AS1530.4 2014

Approval Ref

EXOVA EWFA 33233400

Max single cell size

600mm x 600mm or 450mm diameter

INSTALLATION INSTRUCTIONS

- Measure and mark the position of the damper in the horizontal branch, ensuring that it will be aligned within the shaft wall once the branch is attached to the riser and the shaft wall is constructed
- Fix damper into branch with steel screws (point 6) and seal perimeter with Lorient intumescent sealant (point 7).
- Mechanically fix the branch to the vertical riser with steel screws or pop rivets (point 4).
- Once shaft wall has been constructed, firestop the gap between the casing and the wall with Lorient intumescent sealant – note fill depth details in point 8.
- Ductwork shall be connected with breakaway joints, as per point 9.
- Ensure product identification labels are conspicuously positioned for easy identification.
- Ensure convenient access is provided to allow for AS1851 inspection and maintenance routines.
- Note: Branch / casing and fixings supplied by others.

SHAFT WALL ANGLE FREE 7

FIRE RATED PLASTERBOARD SHAFT WALL SYSTEM

	DESCRIPTION
1H	2 x layers of 13mm fire rated plasterboard or
1I	2 x layers of 16mm fire rated plasterboard.
2	Lorient LVH44 intumescent fire damper.
3	Protected sheet metal riser.
4	Horizontal branch connected to riser with steel fixings or pop rivets.
5	Z275 galvanised steel branch min thickness 0.6mm.
6	LVH44 fixed to casing with 2 x 8g x 25mm self drilling screw on all 4 sides at 100mm centres.
7	Fire damper perimeter sealed with Lorient intumescent sealant.
8	Gap between casing and aperture filled with Lorient intumescent sealant. Backing rod used as required to control sealant fill depth to at least 50mm. Maximum annular gap between casing and wall is 25mm.
9	Casing terminates with breakaway joint as per AS1682.2.
10	25mm fire rated shaftwall liner.

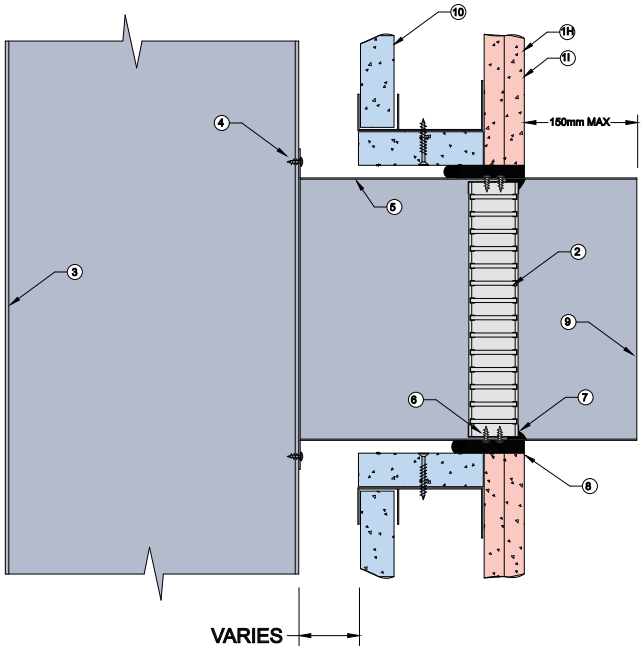

Angle free LVH44 in steel casing connected to sheet metal riser penetrating fire rated Plasterboard shaft wall

FRL -/120/30

Fire Resistance in accordance with

AS1530.4 2014

Approval Ref

EXOVA EWFA 33233400

Max single cell size

600mm x 600mm

INSTALLATION INSTRUCTIONS

- Measure and mark the position of the damper in the horizontal branch, ensuring that it will be aligned within the shaft wall once the branch is attached to the riser and the shaft wall is constructed.
- Fix damper into branch with steel screws (point 6) and seal perimeter with Lorient intumescent sealant (point 7).
- Mechanically fix the branch to the vertical riser with steel screws or pop rivets (point 4).
- Once shaft wall has been constructed, firestop the gap between the casing and the wall with Lorient intumescent sealant – note fill depth details in point 8.
- Ductwork shall be connected with breakaway joints, as per point 9.
- Ensure product identification labels are conspicuously positioned for easy identification.
- Ensure convenient access is provided to allow for AS1851 inspection and maintenance routines.
- Note: Branch / casing and fixings supplied by others.

SHAFT WALL ANGLE FREE 8 TIGHT TO SLAB

FIRE RATED MASONRY / CONCRETE SHAFT WALL SYSTEM

	DESCRIPTION
1A 1B	Masonry or concrete wall (minimum 75mm or thicker in accordance to AS3600 or AS3700 to achieve required FRL).
2	Lorient LVH44 intumescent fire damper.
3	Protected sheet metal riser.
4	Horizontal branch connected to riser with steel fixings or pop rivets.
5	Z275 galvanised steel branch min thickness 0.6mm.
6	LVH44 fixed to casing with 2 x 8g x 25mm self drilling screw on all 4 sides at 100mm centres.
7	Fire damper perimeter sealed with Lorient intumescent sealant.
8	Gap between casing and aperture filled with Lorient intumescent sealant. Backing rod used as required to control sealant fill depth to at least 50mm. Maximum annular gap between casing and wall is 25mm.
9	Casing terminates with breakaway joint as per AS1682.2.
10	100mm wide x min 25mm think non-combustible (with FRL -/120/120) or 100mm x 50mm thick TBA Firefly Intubatt bedded in minimum 1mm layer of intumescent sealant and running full width of the aperture. Block mechanically fixed to slab with expanding steel anchors (e.g Dynabolt or similar).

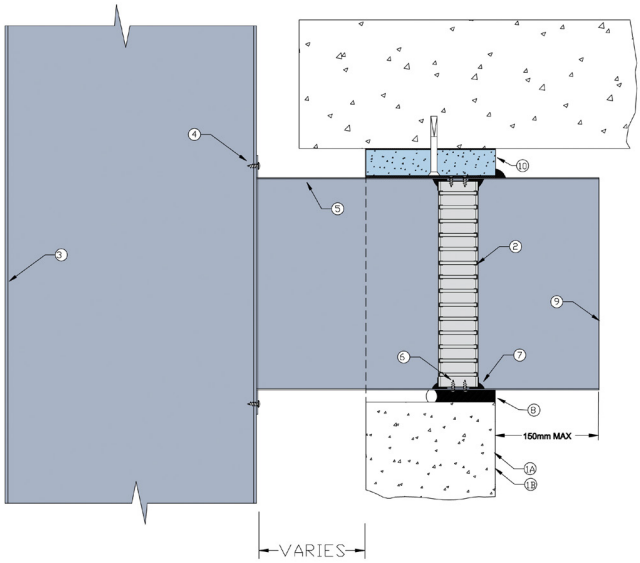

Angle free LVH44 in steel casing connected to sheet metal riser penetrating fire rated Masonry or Concrete shaft wall

FRL -/120/30

Fire Resistance in accordance with

AS1530.4 2014

Approval Ref

EXOVA EWFA 33233400

Max single cell size

600mm x 600mm

INSTALLATION INSTRUCTIONS

- Measure and mark the position of the damper in the horizontal branch ensuring that it will be aligned within the shaft wall once the branch is attached to the riser.
- Fix damper into branch with steel screws (point 6) and seal perimeter with Lorient intumescent sealant (point 7).
- Measure branch width and cut to corresponding length, bed and mechanically fix the Intubatt block into position so that it will create the top edge of the aperture once the shaft wall is constructed.
- Liberally apply Lorient intumescent sealant to Intubatt or non-combustible block then position & mechanically fix the branch to the vertical riser with steel screws or pop rivets (point 4) ensuring that the top edge of the duct branch is hard up against the Intubatt block and all gaps are filled full depth with intumescent sealant.
- Once shaft wall has been constructed firestop the remaining gap between the casing and the wall with Lorient intumescent sealant – note fill depth details in point 8.
- Ductwork shall be connected with breakaway joints, as per point 9.
- Ensure product identification labels are conspicuously positioned for easy identification.
- Ensure convenient access is provided to allow for AS1851 inspection and maintenance routines.
- Note: Branch casing and fixing supplied by others.

SHAFT WALL ANGLE FREE 9 TIGHT TO SLAB

FIRE RATED HEBEL® SHAFT WALL SYSTEM

	DESCRIPTION
1C	Hebel® wall minimum 75mm thick.
2	Lorient LVH44 intumescent fire damper.
3	Protected sheet metal riser.
4	Horizontal branch connected to riser with steel fixings or pop rivets.
5	Z275 galvanised steel branch min thickness 0.6mm.
6	LVH44 fixed to casing with 2 x 8g x 25mm self drilling screw on all 4 sides at 100mm centres.
7	Fire damper perimeter sealed with Lorient intumescent sealant.
8	Gap between casing and aperture filled with Lorient intumescent sealant. Backing rod used as required to control sealant fill depth to at least 50mm. Maximum annular gap between casing and wall is 25mm.
9	Casing terminates with breakaway joint as per AS1682.2.
10	100mm wide x min 25mm think non-combustible (with FRL -/120/120) or 100mm x 50mm thick TBA Firefly Intubatt bedded in minimum 1mm layer of intumescent sealant and running full width of the aperture. Block mechanically fixed to slab with expanding steel anchors (e.g Dynabolt or similar).

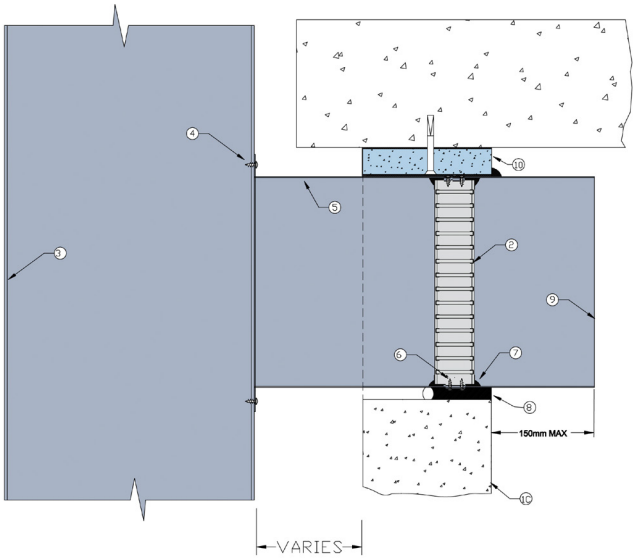

Angle free LVH44 in steel casing connected to sheet metal riser penetrating fire rated Hebel® shaft wall

FRL -/120/30

Fire Resistance in accordance with

AS1530.4 2014

Approval Ref

EXOVA EWFA 33233400

Max single cell size

600mm x 600mm

INSTALLATION INSTRUCTIONS

- Measure and mark the position of the damper in the horizontal branch ensuring that it will be aligned within the shaft wall once the branch is attached to the riser.
- Fix damper into branch with steel screws (point 6) and seal perimeter with Lorient intumescent sealant (point 7).
- Measure branch width and cut to corresponding length, bed and mechanically fix the Intubatt block into position so that it will create the top edge of the aperture once the shaft wall is constructed.
- Liberally apply Lorient intumescent sealant to the block then position & mechanically fix the branch to the vertical riser with steel screws or pop rivets (point 4) ensuring that the top edge of the duct branch is hard up against the block and all gaps are filled full depth with intumescent sealant.
- Once shaft wall has been constructed firestop the remaining gap between the casing and the wall with Lorient intumescent sealant – note fill depth details in point 8.
- Ductwork shall be connected with breakaway joints, as per point 9.
- Ensure product identification labels are conspicuously positioned for easy identification.
- Ensure convenient access is provided to allow for AS1851 inspection and maintenance routines.
- Note: Branch casing and fixing supplied by others.

SHAFT WALL ANGLE FREE 10 TIGHT TO SLAB

FIRE RATED 13MM PLASTERBOARD SHAFT WALL SYSTEM

	DESCRIPTION
1D	13mm fire rated plasterboard (with minimum 51mm deep steel stud).
2	Lorient LVH44 intumescent fire damper.
3	Protected sheet metal riser.
4	Horizontal branch connected to riser with steel fixings or pop rivets.
5	Z275 galvanised steel branch min thickness 0.6mm.
6	LVH44 fixed to casing with 2 x 8g x 25mm self drilling screw on all 4 sides at 100mm centres.
7	Fire damper perimeter sealed with Lorient intumescent sealant.
8	Gap between casing and aperture filled with Lorient intumescent sealant. Backing rod used as required to control sealant fill depth to at least 50mm. Maximum annular gap between casing and wall is 25mm.
9	Casing terminates with breakaway joint as per AS1682.2.
10	100mm wide x min 25mm think non-combustible (with FRL -/120/120) or 100mm x 50mm thick TBA Firefly Intubatt bedded in minimum 1mm layer of intumescent sealant and running full width of the aperture. Block mechanically fixed to slab with expanding steel anchors (e.g Dynabolt or similar).

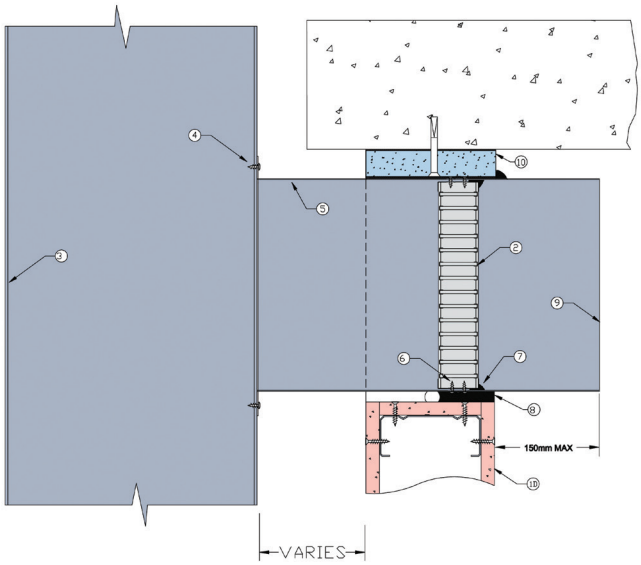

Angle free LVH44 in steel casing connected to sheet metal riser penetrating 13mm fire rated Plasterboard shaft wall

FRL -/60/30

Fire Resistance in accordance with

AS1530.4 2014

Approval Ref

EXOVA EWFA 33233400

Max single cell size

600mm x 600mm

INSTALLATION INSTRUCTIONS

- Measure and mark the position of the damper in the horizontal branch ensuring that it will be aligned within the shaft wall once the branch is attached to the riser.
- Fix damper into branch with steel screws (point 6) and seal perimeter with Lorient intumescent sealant (point 7).
- Measure branch width and cut to corresponding length, bed and mechanically fix the Intubatt block into position so that it will create the top edge of the aperture once the shaft wall is constructed.
- Liberally apply Lorient intumescent sealant to the block then position & mechanically fix the branch to the vertical riser with steel screws or pop rivets (point 4) ensuring that the top edge of the duct branch is hard up against the block and all gaps are filled full depth with intumescent sealant.
- Once shaft wall has been constructed firestop the remaining gap between the casing and the wall with Lorient intumescent sealant – note fill depth details in point 8.
- Ductwork shall be connected with breakaway joints, as per point 9.
- Ensure product identification labels are conspicuously positioned for easy identification.
- Ensure convenient access is provided to allow for AS1851 inspection and maintenance routines.
- Note: Branch casing and fixing supplied by others.

SHAFT WALL ANGLE FREE 11 TIGHT TO SLAB

FIRE RATED 16MM PLASTERBOARD SHAFT WALL SYSTEM

	DESCRIPTION
1E	16mm fire rated plasterboard (with minimum 51mm deep steel stud).
2	Lorient LVH44 intumescent fire damper.
3	Protected sheet metal riser.
4	Horizontal branch connected to riser with steel fixings or pop rivets.
5	Z275 galvanised steel branch min thickness 0.6mm.
6	LVH44 fixed to casing with 2 x 8g x 25mm self drilling screw on all 4 sides at 100mm centres.
7	Fire damper perimeter sealed with Lorient intumescent sealant.
8	Gap between casing and aperture filled with Lorient intumescent sealant. Backing rod used as required to control sealant fill depth to at least 50mm. Maximum annular gap between casing and wall is 25mm.
9	Casing terminates with breakaway joint as per AS1682.2.
10	100mm wide x min 25mm think non-combustible (with FRL -/120/120) or 100mm x 50mm thick TBA Firefly Intubatt bedded in minimum 1mm layer of intumescent sealant and running full width of the aperture. Block mechanically fixed to slab with expanding steel anchors (e.g Dynabolt or similar).

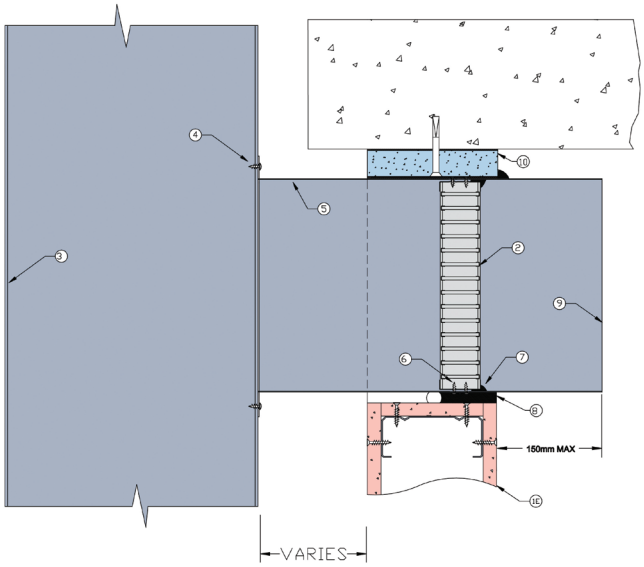

Angle free LVH44 in steel casing connected to sheet metal riser penetrating 16mm fire rated Plasterboard shaft wall

FRL -/90/30

Fire Resistance in accordance with

AS1530.4 2014

Approval Ref

EXOVA EWFA 33233400

Max single cell size

600mm x 600mm

INSTALLATION INSTRUCTIONS

- Measure and mark the position of the damper in the horizontal branch ensuring that it will be aligned within the shaft wall once the branch is attached to the riser.
- Fix damper into branch with steel screws (point 6) and seal perimeter with Lorient intumescent sealant (point 7).
- Measure branch width and cut to corresponding length, bed and mechanically fix the Intubatt block into position so that it will create the top edge of the aperture once the shaft wall is constructed.
- Liberally apply Lorient intumescent sealant to the intubatt or non-combustible block then position & mechanically fix the branch to the vertical riser with steel screws or pop rivets (point 4) ensuring that the top edge of the duct branch is hard up against the block and all gaps are filled full depth with intumescent sealant.
- Once shaft wall has been constructed firestop the remaining gap between the casing and the wall with Lorient intumescent sealant – note fill depth details in point 8.
- Ductwork shall be connected with breakaway joints, as per point 9.
- Ensure product identification labels are conspicuously positioned for easy identification.
- Ensure convenient access is provided to allow for AS1851 inspection and maintenance routines.
- Note: Branch casing and fixing supplied by others.

SHAFT WALL ANGLE FREE 12 TIGHT TO SLAB

FIRE RATED 13MM OR 16MM PLASTERBOARD SHAFT WALL SYSTEM

	DESCRIPTION
1F 1G	2 x 13mm or 2 x 16mm fire rated plasterboard (with minimum 51mm deep steel stud).
2	Lorient LVH44 intumescent fire damper.
3	Protected sheet metal riser.
4	Horizontal branch connected to riser with steel fixings or pop rivets.
5	Z275 galvanised steel branch min thickness 0.6mm.
6	LVH44 fixed to casing with 2 x 8g x 25mm self drilling screw on all 4 sides at 100mm centres.
7	Fire damper perimeter sealed with Lorient intumescent sealant.
8	Gap between casing and aperture filled with Lorient intumescent sealant. Backing rod used as required to control sealant fill depth to at least 50mm. Maximum annular gap between casing and wall is 25mm.
9	Casing terminates with breakaway joint as per AS1682.2.
10	100mm wide x min 25mm think non-combustible (with FRL -/120/120) or 100mm x 50mm thick TBA Firefly Intubatt bedded in minimum 1mm layer intumescent sealant and running full width of the aperture. Block mechanically fixed to slab with expanding steel anchors (e.g Dynabolt or similar).

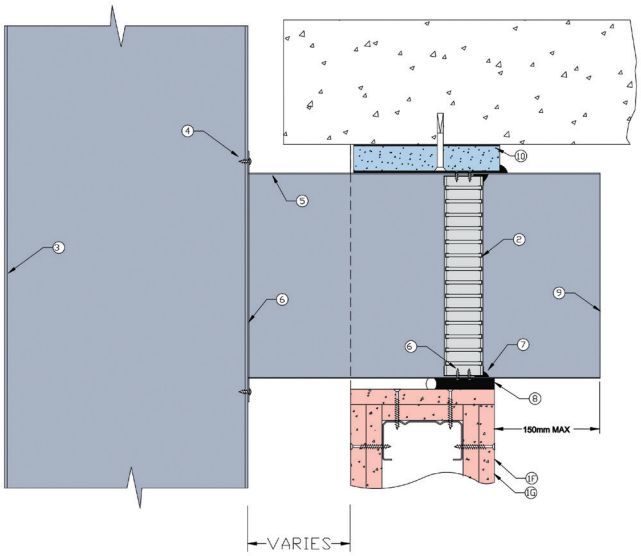

Angle free LVH44 in steel casing connected to sheet metal riser penetrating 13mm or 16mm fire rated Plasterboard shaft wall

FRL -/120/30

Fire Resistance in accordance with

AS1530.4 2014

Approval Ref

EXOVA EWFA 33233400

Max single cell size

600mm x 600mm

INSTALLATION INSTRUCTIONS

- Measure and mark the position of the damper in the horizontal branch ensuring that it will be aligned within the shaft wall once the branch is attached to the riser.
- Fix damper into branch with steel screws (point 6) and seal perimeter with Lorient intumescent sealant (point 7).
- Measure branch width and cut to corresponding length, bed and mechanically fix the Intubatt block into position so that it will create the top edge of the aperture once the shaft wall is constructed.
- Liberally apply Lorient intumescent sealant to intubatt or non-combustible block then position & mechanically fix the branch to the vertical riser with steel screws or pop rivets (point 4) ensuring that the top edge of the duct branch is hard up against the block and all gaps are filled full depth with intumescent sealant.
- Once shaft wall has been constructed firestop the remaining gap between the casing and the wall with Lorient intumescent sealant – note fill depth details in point 8.
- Ductwork shall be connected with breakaway joints, as per point 9.
- Ensure product identification labels are conspicuously positioned for easy identification.
- Ensure convenient access is provided to allow for AS1851 inspection and maintenance routines.
- Note: Branch casing and fixing supplied by others.

SHAFT WALL ANGLE FREE 13 TIGHT TO SLAB

FIRE RATED 13MM OR 16MM PLASTERBOARD LAMINATED SHAFT WALL SYSTEM

	DESCRIPTION
1J 1K	3 layers of 13mm or 16mm fire rated plasterboard.
2	Lorient LVH44 intumescent fire damper.
3	Protected sheet metal riser.
4	Horizontal branch connected to riser with steel fixings or pop rivets.
5	Z275 galvanised steel branch min thickness 0.6mm.
6	LVH44 fixed to casing with 2 x 8g x 25mm self drilling screw on all 4 sides at 100mm centres.
7	Fire damper perimeter sealed with Lorient intumescent sealant.
8	Gap between casing and aperture filled full depth with Lorient intumescent sealant. Maximum annular gap between casing and wall is 25mm.
9	Casing terminates with breakaway joint as per AS1682.2.
10	100mm wide x min 25mm think non-combustible (with FRL -/120/120) or 100mm x 50mm thick TBA Firefly Intubatt bedded in minimum 1mm layer of intumescent sealant and running full width of the aperture. Block mechanically fixed to slab with expanding steel anchors (e.g Dynabolt or similar).

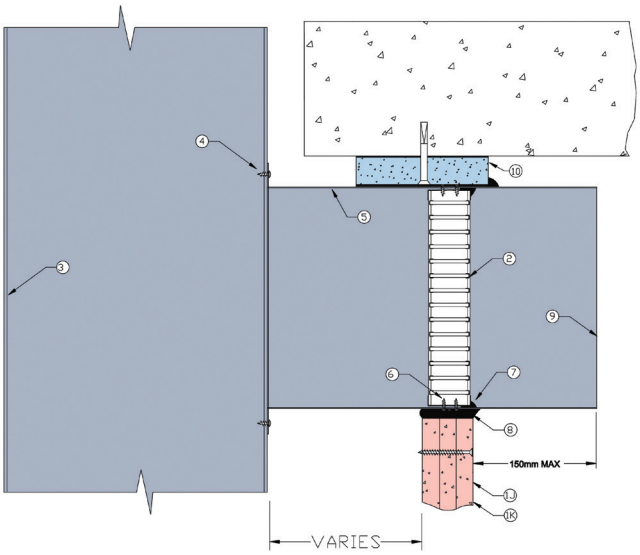

Angle free LVH44 in steel casing connected to sheet metal riser penetrating 13mm or 16mm fire rated laminated Plasterboard shaft wall

FRL -/120/-

Fire Resistance in accordance with

AS1530.4 2014

Approval Ref

EXOVA EWFA 33233400

Max cell size

600mm x 600mm

INSTALLATION INSTRUCTIONS

- Measure and mark the position of the damper in the horizontal branch ensuring that it will be aligned within the shaft wall once the branch is attached to the riser.
- Fix damper into branch with steel screws (point 6) and seal perimeter with Lorient intumescent sealant (point 7).
- Measure branch width and cut to corresponding length, bed and mechanically fix the Intubatt block into position so that it will create the top edge of the aperture once the shaft wall is constructed.
- Liberally apply Lorient intumescent sealant to intubatt or non-combustible block then position & mechanically fix the branch to the vertical riser with steel screws or pop rivets (point 4) ensuring that the top edge of the duct branch is hard up against the block and all gaps are filled full depth with intumescent sealant.
- Once shaft wall has been constructed firestop the remaining gap between the casing and the wall with Lorient intumescent sealant – note fill depth details in point 8.
- Ductwork shall be connected with breakaway joints, as per point 9.
- Ensure product identification labels are conspicuously positioned for easy identification.
- Ensure convenient access is provided to allow for AS1851 inspection and maintenance routines.
- Note: Branch casing and fixing supplied by others.

SHAFT WALL ANGLE FREE 14 TIGHT TO SLAB

FIRE RATED 25MM SHAFT LINER WITH 13MM OR 16MM PLASTERBOARD

	DESCRIPTION
1J 1K	2 x layer of 13mm or 16mm fire rated plasterboard.
2	Lorient LVH44 intumescent fire damper.
3	Protected sheet metal riser.
4	Horizontal branch connected to riser with steel fixings or pop rivets.
5	Z275 galvanised steel branch min thickness 0.6mm.
6	LVH44 fixed to casing with 2 x 8g x 25mm self drilling screw on all 4 sides at 100mm centres.
7	Fire damper perimeter sealed with Lorient intumescent sealant.
8	Gap between casing and aperture filled with Lorient intumescent sealant. Backing rod used as required to control sealant fill depth to at least 50mm. Maximum annular gap between casing and wall is 25mm.
9	Casing terminates with breakaway joint as per AS1682.2.
10	100mm wide x min 25mm think non-combustible (with FRL -/120/120) or 100mm x 50mm thick TBA Firefly Intubatt bedded in minimum 1mm layer of intumescent sealant and running full width of the aperture. Block mechanically fixed to slab with expanding steel anchors (e.g Dynabolt or similar).
11	25mm fire rated shaft wall liner (with J Track minimum 64mm wide 0.8 BMT galvanised steel).

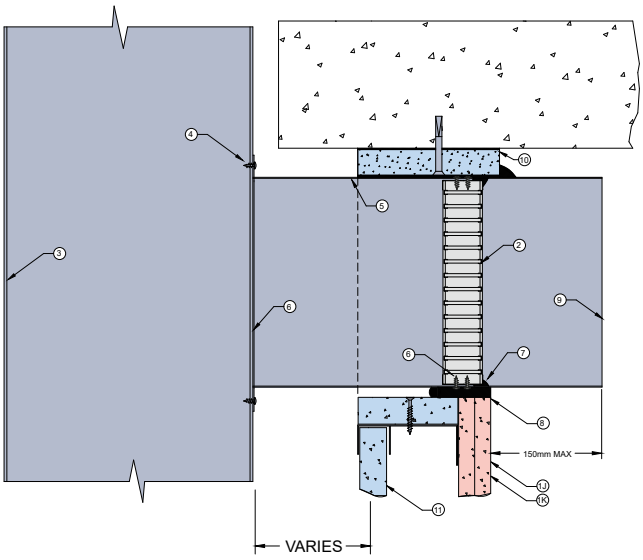

Angle free LVH44 in steel casing connected to sheet metal riser penetrating 25mm shaft liner with 13mm or 16mm fire rated Plasterboard shaft wall

FRL -/120/30

Fire Resistance in accordance with

AS1530.4 2014

Approval Ref

EXOVA EWFA 33233400

Max single cell size

600mm x 600mm

INSTALLATION INSTRUCTIONS

- Measure and mark the position of the damper in the horizontal branch ensuring that it will be aligned within the shaft wall once the branch is attached to the riser.
- Fix damper into branch with steel screws (point 6) and seal perimeter with Lorient intumescent sealant (point 7).
- Measure branch width and cut to corresponding length, bed and mechanically fix the Intubatt block into position so that it will create the top edge of the aperture once the shaft wall is constructed.
- Liberally apply Lorient intumescent sealant to intubatt or non-combustible block then position & mechanically fix the branch to the vertical riser with steel screws or pop rivets (point 4) ensuring that the top edge of the duct branch is hard up against the block and all gaps are filled full depth with intumescent sealant.
- Once shaft wall has been constructed firestop the remaining gap between the casing and the wall with Lorient intumescent sealant – note fill depth details in point 8.
- Ductwork shall be connected with breakaway joints, as per point 9.
- Ensure product identification labels are conspicuously positioned for easy identification.
- Ensure convenient access is provided to allow for AS1851 inspection and maintenance routines.
- Note: Branch casing and fixing supplied by others.

SPEEDPANEL® 1

FIRE RATED SPEEDPANEL® WALL SYSTEM

	DESCRIPTION
1	Speedpanel wall system (minimum 51mm thick for -/60/30, 64mm for -/90/30, 78mm for -/120/30 FRL).
2	Aperture lined out with galvanised steel C track section and screw fixed to wall with steel fixings as per Speedpanel® test approvals.
3	Lorient LVH44 intumescent fire damper.
4	Angles fixed to wall with casing steel self drilling screws at 150mm centres.
5	0.6mm (min) Z275 galvanised steel angles to all four sides. Angle dimension shall be continuous and at least 2 x the dimension of the gap between damper casing and the penetrated element. Each angle fixed to damper casing with minimum 8g x 15mm steel self-drilling screw at 100mm centres or at least 2 per side.
6	Gap between casing and aperture filled with Lorient intumescent sealant. Backing rod used as required to control sealant fill depth to at least 25mm. Maximum annular gap between casing and wall 25mm.
7	Fire damper perimeter sealed with Lorient intumescent sealant.
8	Z275 galvanised steel casing minimum 0.6mm.
9	LVH44 fixed to casing with 2 x 8g x 25mm self drilling screw on all 4 sides at 100mm centres.
10	Casing terminates with breakaway joints, as per AS1682.2.

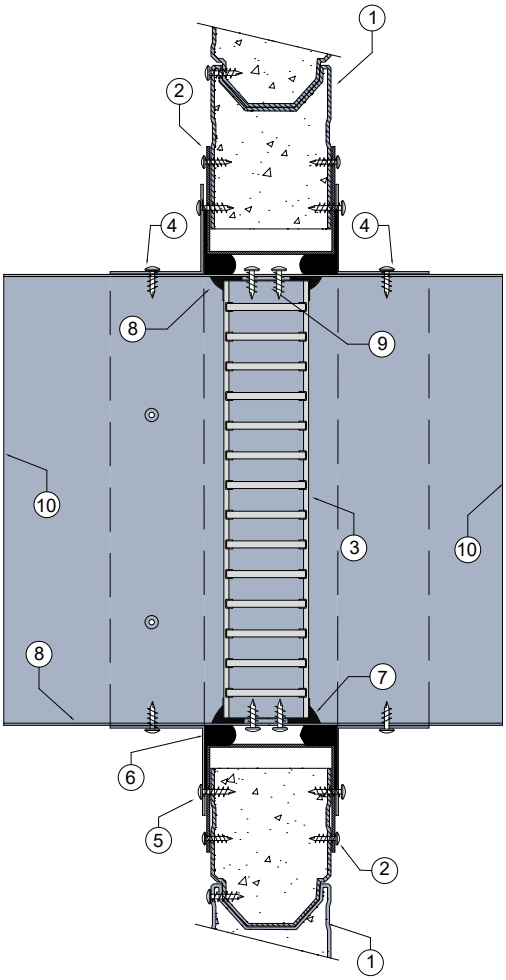

LVH44 in steel casing penetrating fire rated Speedpanel® wall

FRL -/120/30

Fire Resistance in accordance with

AS1530.4 2014

Approval Ref

EXOVA EWFA 33233400

Max single cell size

600mm x 600mm

INSTALLATION INSTRUCTIONS

- Prepare the wall opening to accept the fire damper and install in wall, as shown in system detail.
- Centralise the casing and firestop the gap between the casing and wall with Lorient intumescent sealant, note fill details in point 6.
- Perimeter angles are mechanically fixed to casing with steel self drilling screws or pop rivets, as detailed in points 4 & 5.
- Ductwork shall be connected with breakaway joints, as per point 10.
- Ensure product identification labels are conspicuously positioned for easy identification.
- Ensure convenient access is provided to allow for AS1851 inspection and maintenance routines.
- Note: Damper casings, angles and fixings supplied by others.

SPEEDPANEL® 2

FIRE RATED SPEEDPANEL® WALL SYSTEM

	DESCRIPTION
1	Speedpanel wall system (minimum 51mm thick for -/60/30, 64mm for -/90/30, 78mm for -/120/30 FRL).
2	Aperture lined out with galvanised steel C track section and screw fixed to wall with steel fixings, as per Speedpanel® test approvals.
3	Lorient LVH44 intumescent fire damper.
4	Angles fixed to wall with 10g x 38mm steel screw at 150mm centres.
5	0.6mm (min) Z275 galvanised steel angles to all four sides. Angle dimension shall be continuous and at least 2 x the dimension of the gap between damper casing and the penetrated element. Each angle fixed to damper casing with minimum 8g x 15mm steel self-drilling screw at 100mm centres or at least 2 per side.
6	Gap between casing and aperture filled with Lorient intumescent sealant. Backing rod used as required to control sealant fill depth to at least 50mm. Maximum annular gap between casing and wall 25mm.
7	Fire damper perimeter sealed with Lorient intumescent sealant.
8	Z275 galvanised steel casing minimum 0.6mm.
9	LVH44 fixed to casing with 2 x 8g x 25mm self drilling screw on all 4 sides at 100mm centres.
10	Casing terminates with breakaway joints, as per AS1682.2.

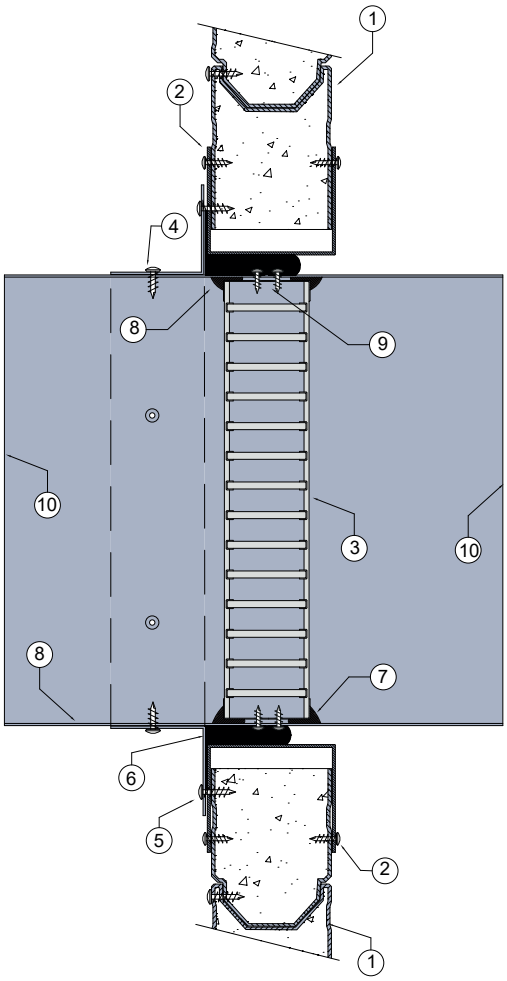

LVH44 in steel casing penetrating fire rated Speedpanel® wall

FRL -/120/30

Fire Resistance in accordance with

AS1530.4 2014

Approval Ref

EXOVA EWFA 33233400

Max single cell size

600mm x 600mm

INSTALLATION INSTRUCTIONS

- Prepare the wall opening to accept the fire damper and install in wall, as shown in system detail.
- Centralise the casing and firestop the gap between the casing and wall with Lorient intumescent sealant, note fill details in point 6.
- Perimeter angles are mechanically fixed to casing with steel self drilling screws or pop rivets, as detailed in points 4 & 5.
- Ductwork shall be connected with breakaway joints, as per point 10.
- Ensure product identification labels are conspicuously positioned for easy identification.
- Ensure convenient access is provided to allow for AS1851 inspection and maintenance routines.
- Note: Damper casings, angles and fixings supplied by others.

SPEEDPANEL® 3

FIRE RATED SPEEDPANEL® WALL SYSTEM

	DESCRIPTION
1	Speedpanel® wall system with cored out circular aperture.
2	Lorient LVH44C intumescent fire damper.
3	40mm x 40mm x 20mm x 1mm Z275 galvanised steel angle brackets 3 off brackets for up to 300mm diameter and 4 brackets for larger sized up to 450mm diameter. Each angles fitted to the damper casing with minimum 8g x 15mm steel self-drilling screw.
4	Angles fixed to wall with 10g x 38mm steel screws.
5	Gap between casing and aperture filled full depth with Lorient intumescent sealant. Maximum annular gap between casing and wall 25mm.
6	Fire damper perimeter sealed with Lorient intumescent sealant.
7	Z275 galvanised steel casing minimum 0.6mm.
8	LVH44C fixed to casing with 2 x 8g x 25mm self drilling screw.
9	Casing terminates with breakaway joints, as per AS1682.2.

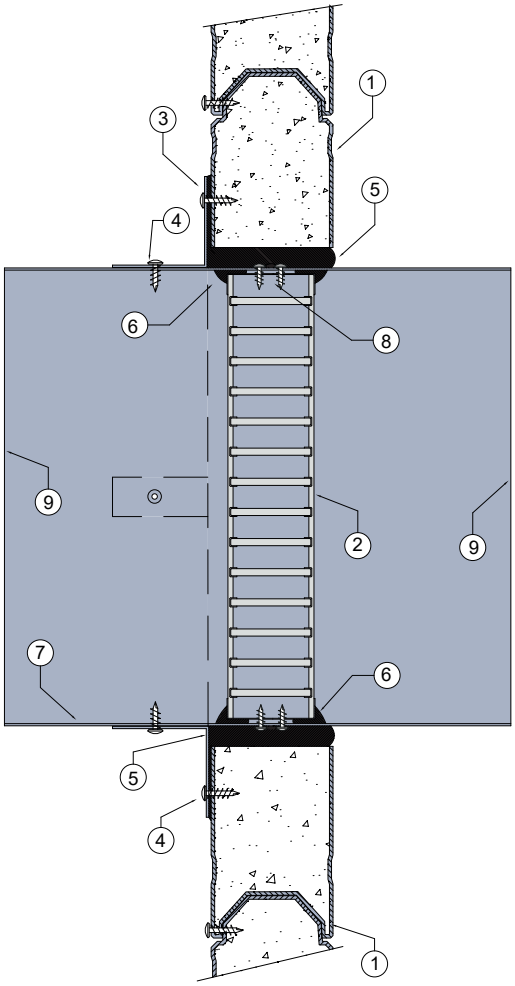

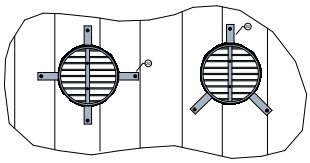

Circular aperture cored straight through wall.
3 off fixing angles up to 250mm diameter.
4 off fixing angles 300mm to 450mm diameter.

LVH44C in steel casing penetrating fire rated Speedpanel® wall

FRL -/120/30

Fire Resistance in accordance with

AS1530.4 2014

Approval Ref

EXOVA EWFA 33233400

Max size

450mm diameter

Note: LVH44C can achieve -/120/120 when fitted with R1.0 Polyester insulated flexible duct

INSTALLATION INSTRUCTIONS

- Prepare the wall opening to accept the fire damper and install in wall, as shown in system detail.
- Centralise the casing and firestop the gap between the casing and wall with Lorient intumescent sealant, note fill details in point 6.
- Perimeter angles are mechanically fixed to casing with steel self drilling screws or pop rivets, as detailed in points 4 & 5.
- Ductwork shall be connected with breakaway joints, as per point 9.
- Ensure product identification labels are conspicuously positioned for easy identification.
- Ensure convenient access is provided to allow for AS1851 inspection and maintenance routines.
- Note: Fixings supplied by others.

INTUBATT 1

FIRE RATED WALL FITTED WITH TBA FIREFLYBATT SYSTEM

	DESCRIPTION
1	100mm minimum thick Masonry, Concrete or Hebel® wall.
2	2 x 50mm thick TBA FIREFLYBatt friction fitted centrally into wall aperture.
3	TBA FIREFLYBatt incorporates Lorient LVH44 intumescent fire damper max. 450mm x 450mm.
4	TBA FIREFLYBatt aperture raw edges treated with brushable TBA FIREFLYMastic as per test approvals.
5	For up to 200x200mm: Lorient LVH44 damper glued into the aperture using FIREFLYMastic (full depth). Up to 450x450mm: Lorient LVH44 damper mechanically fixed with minimum 0.6mm "L" or "Z" shape galvanised steel brackets full length using minimum 4.2mm x 20mm metal screws at 150mm centres or at least 2 per side into damper. Bracket pre-drilled with 5mm, 50mm from each corner and secured to FIREFLYBatt using 75mm long pigtail screws (8 fixings per damper). All gaps selaed with FIREFLYMastic.
6	All other joints sealed with TBA FIREFLYMastic.

For TBA Firefly product enquiries visit:
www.tbafirefly.com.au

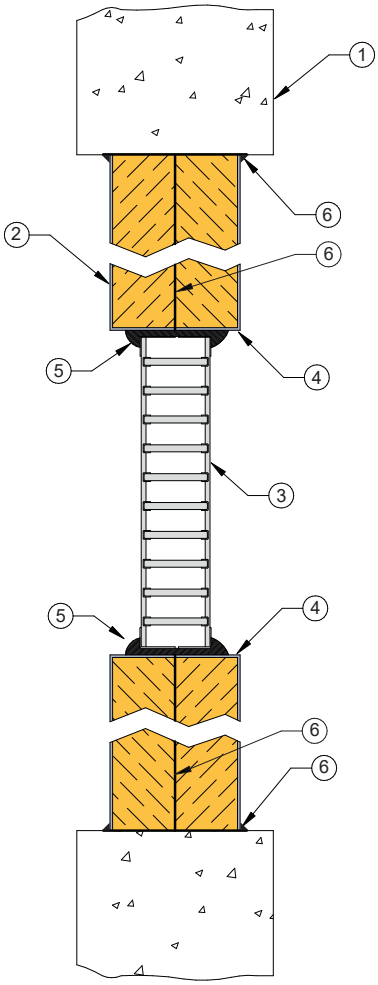

Masonry, concrete or Hebel® wall with TBA FIREFLYBatt containing Lorient LVH44 intumescent damper

FRL Up to -/120/-

Fire Resistance in accordance with

AS1530.4 2014

Approval Ref

EXOVA EWFA FAS190234
EXOVA EWFA FAS190235

Max size

450mm x 450mm

INSTALLATION INSTRUCTIONS

- Prepare opening in wall to accept the TBA FIREFLYBatt.
- Friction fit FIREFLYBatt into wall aperture as per test approval and see point 2.
- Cut hole for LVH44 and prepare aperture in Intubatt, as per point 4.
- Fit LVH44 into prepared FIREFLYBatt aperture and adhere in place using TBA FIREFLYMastic. Note fill details in point 5.
- Ensure all joints are sealed, as per point 6.
- Ensure product identification labels are conspicuously positioned for easy identification.
- Ensure convenient access is provided to allow for AS1851 inspection and maintenance routines.
- Note: TBA FIREFLYBatt and FIREFLYMastic supplied by others.

INTUBATT 2

FIRE RATED WALL FITTED WITH TBA FIREFLYBATT SYSTEM

	DESCRIPTION
1	100mm minimum thick Masonry, Concrete or Hebel® wall.
2	2 x 50mm thick TBA FIREFLYBatt one friction fit and one overlapping aperture (min. 100mm).
3	TBA FIREFLYBatt panel mechanically fixed to wall with min 4.2mm x 75 self drilling bugle head screws and min. M6 x 25mm x 1.5mm penny washer at nom. 50mm from each corner and then at max 300mm centres.
4	TBA FIREFLYBatt incorporates Lorient LVH44 intumescent fire damper max. 450mm x 450mm.
5	TBA FIREFLYBatt aperture raw edges treated with FIREFLYMastic, as per test approvals.
6	For up to 200x200mm: Lorient LVH44 damper glued into the aperture using FIREFLYMastic (full depth). Up to 450x450mm: Lorient LVH44 damper mechanically fixed with minimum 0.6mm "L" or "Z" shape galvanised steel brackets full length using minimum 4.2mm x 20mm metal screws at 150mm centres or at least 2 per side into damper. Bracket pre-drilled with 5mm, 50mm from each corner and secured to FIREFLYBatt using 75mm long pigtail screws (8 fixings per damper). All gaps selaed with FIREFLYMastic.
7	All other joints sealed with TBA FIREFLYMastic.

For TBA Firefly product enquiries visit:
www.tbafirefly.com.au

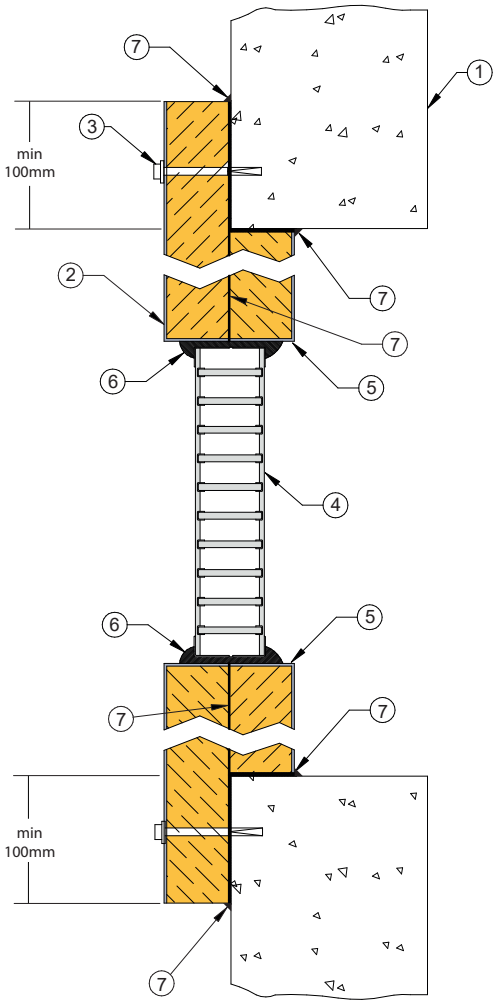

Masonry, concrete or Hebel® wall with TBA FIREFLYBatt containing Lorient LVH44 intumescent damper

FRL Up to -/120/-

Fire Resistance in accordance with

AS1530.4 2014

Approval Ref

EXOVA EWFA FAS190234
EXOVA EWFA FAS190235

Max size

450mm x 450mm

INSTALLATION INSTRUCTIONS

- Prepare wall opening to accept TBA FIREFLYBatt.
- Cut and friction fit Intubatt into wall aperture and fix with fixings as per test approval - see points 2 & 3.
- Cut hole for LVH44 and prepare aperture in Intubatt cut edges, as per point 4.
- Fit LVH44 into prepared FIREFLYBatt aperture and adhere in place using TBA FIREFLYMastic. Note fill details in point 6.
- Ensure all joints are sealed, as per point 7.
- Ensure product identification labels are conspicuously positioned for easy identification.
- Ensure convenient access is provided to allow for AS1851 inspection and maintenance routines.
- Note: TBA FIREFLYBatt and FIREFLYMastic and metal fixings supplied by others.

INTUBATT 3

FIRE RATED WALL FITTED WITH TBA FIREFLYBATT SYSTEM

	DESCRIPTION
1	116mm minimum thick Plasterboard steel or timber stud wall with plasterboard lined aperture.
2	2 x 50mm thick TBA FIREFLYBatt friction fitted centrally into wall aperture.
3	TBA FIREFLYBatt incorporates Lorient LVH44 intumescent fire damper max. 450mm x 450mm.
4	TBA FIREFLYBatt aperture raw edges treated with FIREFLYMastic as per test approvals.
5	For up to 200x200mm: Lorient LVH44 damper glued into the aperture using FIREFLYMastic (full depth). Up to 450x450mm: Lorient LVH44 damper mechanically fixed with minimum 0.6mm "L" or "Z" shape galvanised steel brackets full length using minimum 4.2mm x 20mm metal screws at 150mm centres or at least 2 per side into damper. Bracket pre-drilled with 5mm, 50mm from each corner and secured to FIREFLYBatt using 75mm long pigtail screws (8 fixings per damper). All gaps selaed with FIREFLYMastic.
6	All other joints sealed with TBA FIREFLYMastic.

For TBA Firefly product enquiries visit:
www.tbafirefly.com.au

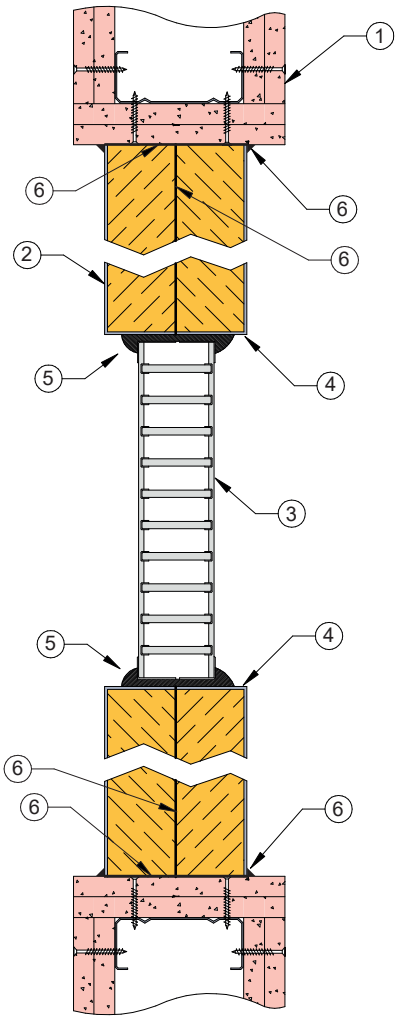

Fire rated plasterboard stud wall with TBA FIREFLYBatt containing Lorient LVH44 intumescent damper

FRL Up to -/120/-

Fire Resistance in accordance with

AS1530.4 2014

Approval Ref

EXOVA EWFA FAS190234
EXOVA EWFA FAS190235

Max size

450mm x 450mm

INSTALLATION INSTRUCTIONS

- Prepare opening in wall to accept the TBA FIREFLYBatt.
- Friction fit Intubatt into wall aperture, as per test approval and see point 2.
- Cut hole for LVH44 and prepare aperture in FIREFLYBatt, as per point 4.
- Fit LVH44 into prepared FIREFLYBatt aperture and adhere in place using TBA FIREFLYMastic. Note fill details in point 5.
- Ensure all joints are sealed, as per point 6.
- Ensure product identification labels are conspicuously positioned for easy identification.
- Ensure convenient access is provided to allow for AS1851 inspection and maintenance routines.
- Note: FIREFLYBatt and FIREFLYMastic supplied by others.

INTUBATT 4

FIRE RATED WALL FITTED WITH TBA FIREFLYBATT SYSTEM

	DESCRIPTION
1	116mm minimum plasterboard steel or timber stud wall with plasterboard lined aperture.
2	2 x 50mm thick TBA FIREFLYBatt friction fit and one overlapping aperture (min. 100mm).
3	TBA FIREFLYBatt panel mechanically fixed to wall with min 4.2mm x 75 self drilling bugle head screws and min. M6 x 25mm x 1.5mm penny washer at nom. 50mm from each corner and then at max 300mm centres.
4	TBA FIREFLYBatt incorporates Lorient LVH44 intumescent fire damper max. 450mm x 450mm.
5	TBA FIREFLYBatt aperture raw edges treated with FIREFLYMastic, as per test approvals.
6	For up to 200x200mm: Lorient LVH44 damper glued into the aperture using FIREFLYMastic (full depth). Up to 450x450mm: Lorient LVH44 damper mechanically fixed with minimum 0.6mm "L" or "Z" shape galvanised steel brackets full length using minimum 4.2mm x 20mm metal screws at 150mm centres or at least 2 per side into damper. Bracket pre-drilled with 5mm, 50mm from each corner and secured to FIREFLYBatt using 75mm long pigtail screws (8 fixings per damper). All gaps selaed with FIREFLYMastic.
7	All other joints sealed with FIREFLYMastic.

For TBA Firefly product enquiries visit:
www.tbafirefly.com.au

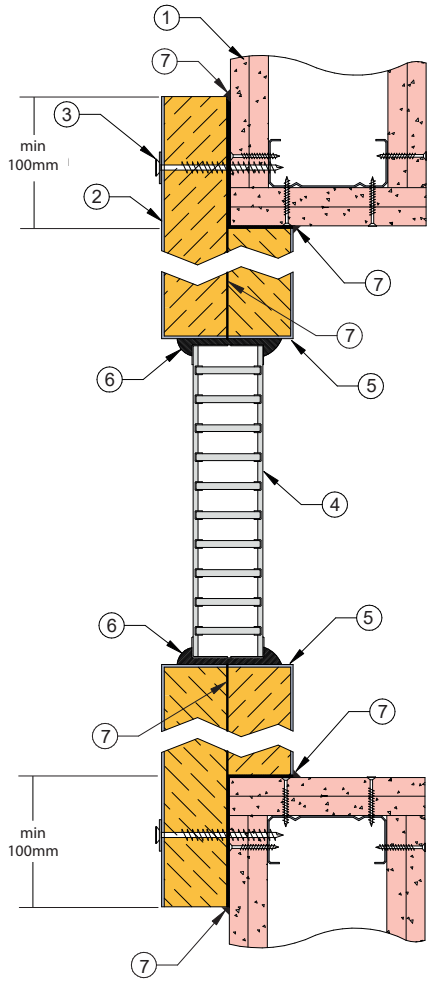

Fire rated plasterboard stud wall with TBA FIREFLYBatt containing Lorient LVH44 intumescent damper

FRL Up to -/120/-

Fire Resistance in accordance with

AS1530.4 2014

Approval Ref

EXOVA EWFA FAS190234
EXOVA EWFA FAS190235

Max size

450mm x 450mm

INSTALLATION INSTRUCTIONS

- Prepare wall opening to accept TBA FIREFLYBatt.
- Cut and friction fit FIREFLYBatt into wall aperture and fix with fixings, as per test approval - see points 2 & 3.
- Cut hole for LVH44 and prepare aperture in Intubatt cut edges, as per point 4.
- Fit LVH44 into prepared FIREFLYBatt aperture and adhere in place using TBA FIREFLYMastic. Note fill details in point 6.
- Ensure all joints are sealed, as per point 7.
- Ensure product identification labels are conspicuously positioned for easy identification.
- Ensure convenient access is provided to allow for AS1851 inspection and maintenance routines.
- Note: FIREFLYBatt and FIREFLYMastic supplied by others.

INTUBATT 5

FIRE RATED WALL FITTED WITH TBA FIREFLYBATT SYSTEM

	DESCRIPTION
1	116mm minimum thick Plasterboard steel or timber stud wall with TBA Firefly Intubatt aperture lining.
2	2 x 50mm thick TBA FIREFLYBatt friction fitted centrally into wall aperture.
3	TBA FIREFLYBatt incorporates Lorient LVH44 intumescent fire damper max. 450mm x 450mm.
4	TBA FIREFLYBatt aperture raw edges treated with FIREFLYMastic as per test approvals.
5	For up to 200x200mm: Lorient LVH44 damper glued into the aperture using FIREFLYMastic (full depth). Up to 450x450mm: Lorient LVH44 damper mechanically fixed with minimum 0.6mm "L" or "Z" shape galvanised steel brackets full length using minimum 4.2mm x 20mm metal screws at 150mm centres or at least 2 per side into damper. Bracket pre-drilled with 5mm, 50mm from each corner and secured to FIREFLYBatt using 75mm long pigtail screws (8 fixings per damper). All gaps selaed with FIREFLYMastic.
6	All other joints sealed with FIREFLYMastic.

For TBA Firefly product enquiries visit:
www.tbafirefly.com.au

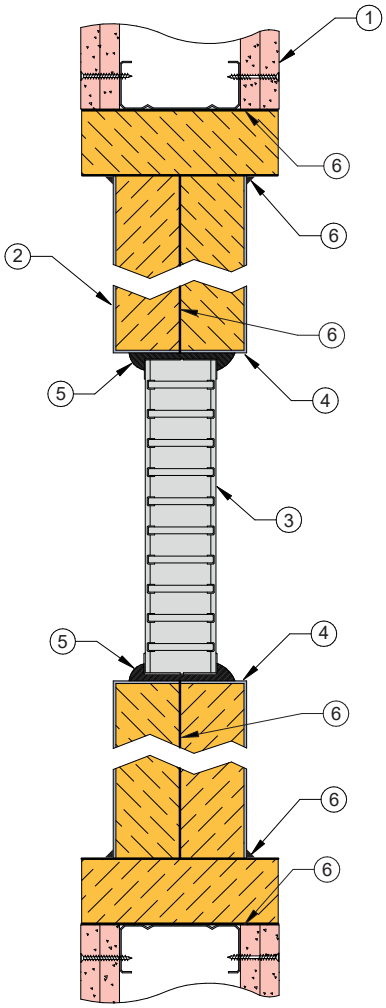

Fire rated plasterboard stud wall with TBA FIREFLYBatt containing Lorient LVH44 intumescent damper

FRL Up to -/120/-

Fire Resistance in accordance with

AS1530.4 2014

Approval Ref

EXOVA EWFA FAS190234
EXOVA EWFA FAS190235

Max size

450mm x 450mm

INSTALLATION INSTRUCTIONS

- Prepare opening in wall to accept the TBA FIREFLYBatt.
- Line aperture with FIREFLYBatt as per test approvals.
- Friction fit FIREFLYBatt into wall aperture as per test approval - see point 2.
- Cut hole for LVH44 and pepare aperture in Intubatt, as per point 4.
- Fit LVH44 into prepared FIREFLYBatt aperture and adhere in place using TBA FIREFLYMastic. Note fill details in point 5.
- Ensure all joints are sealed, as per point 6.
- Ensure product identification labels are conspicuously positioned for easy identification.
- Ensure convenient access is provided to allow for AS1851 inspection and maintenance routines.
- Note: TBA FIREFLYBatt and TBAFIREFLYMastic supplied by others.

INTUBATT 6

FIRE RATED WALL FITTED WITH TBA FIREFLYBATT SYSTEM

	DESCRIPTION
1	78mm Speedpanel® wall.
2	2 x 50mm thick TBA FIREFLYBatt friction fit and one overlapping aperture (min. 100mm).
3	TBA FIREFLYBatt panel mechanically fixed to wall with min 4.2mm x 75 self drilling bugle head screws and min. M6 x 25mm x 1.5mm penny washer at nom. 50mm from each corner and then at max 300mm centres.
4	TBA FIREFLYBatt incorporates Lorient LVH44 intumescent fire damper max. 450mm x 450mm.
5	TBA FIREFLYBatt aperture raw edges treated with brushable TBA Firefly intumastic sealant as per test approvals.
6	For up to 200x200mm: Lorient LVH44 damper glued into the aperture using FIREFLYMastic (full depth). Up to 450x450mm: Lorient LVH44 damper mechanically fixed with minimum 0.6mm "L" or "Z" shape galvanised steel brackets full length using minimum 4.2mm x 20mm metal screws at 150mm centres or at least 2 per side into damper. Bracket pre-drilled with 5mm, 50mm from each corner and secured to FIREFLYBatt using 75mm long pigtail screws (8 fixings per damper). All gaps selaed with FIREFLYMastic.
7	All other joints sealed with FIREFLYMastic.

For TBA Firefly product enquiries visit:
www.tbafirefly.com.au

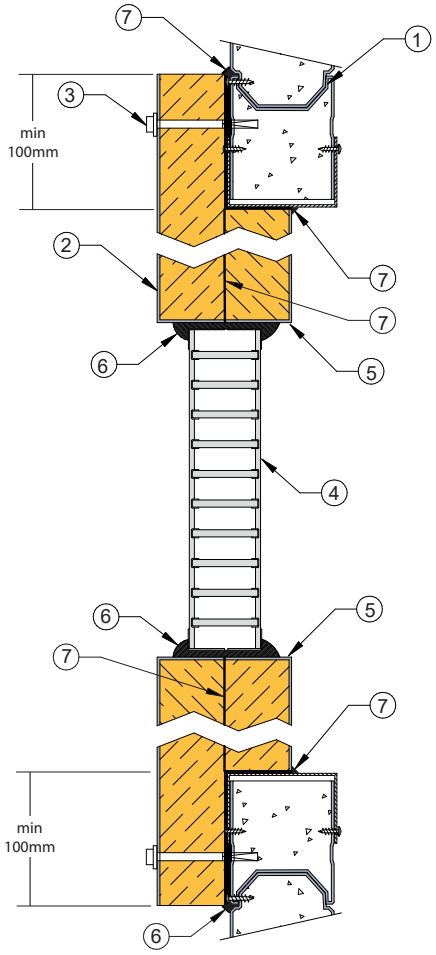

LVH44 fitted into TBA FIREFLYBatt panel

FRL Up to -/120/-

Fire Resistance in accordance with

AS1530.4 2014

Approval Ref

EXOVA EWFA FAS190234
EXOVA EWFA FAS190235

Max size

450mm x 450mm

INSTALLATION INSTRUCTIONS

- Prepare wall opening to accept TBA FIREFLYBatt
- Cut and friction fit FIREFLYBatt into wall aperture and fix with fixings as per test approval - see points 2 & 3.
- Cut hole for LVH44 and prepare aperture in FIREFLYBatt cut edges, as per point 4.
- Fit LVH44 into prepared FIREFLYBatt aperture and adhere in place usingTBA FIREFLYMastic. Note fill details in point 6.
- Ensure all joints are sealed, as per point 7.
- Ensure product identification labels are conspicuously positioned for easy identification.
- Ensure convenient access is provided to allow for AS1851 inspection and maintenance routines.
- Note: TBA FIREFLYBatt and TBA FIREFLYMastic and metal fixings supplied by others.

CEILING 1

FIRE & INCIPIENT RATED CEILINGS

	DESCRIPTION
1	2 x layers of 16mm fire rated plasterboard ceiling
2	LOR-LITE fire rated plenum box.
3	Lorient LVH44 intumescent grille. (screws fully fixed to damper as part of ceiling box)
4	Plenum box bedded in Lorient intumescent sealant.
5	Gap between casing and plasterboard filled full depth with Lorient intumescent sealant.
6	Aluminium diffuser fitted to underside as required.
7	Insulated flexible duct connected to box.

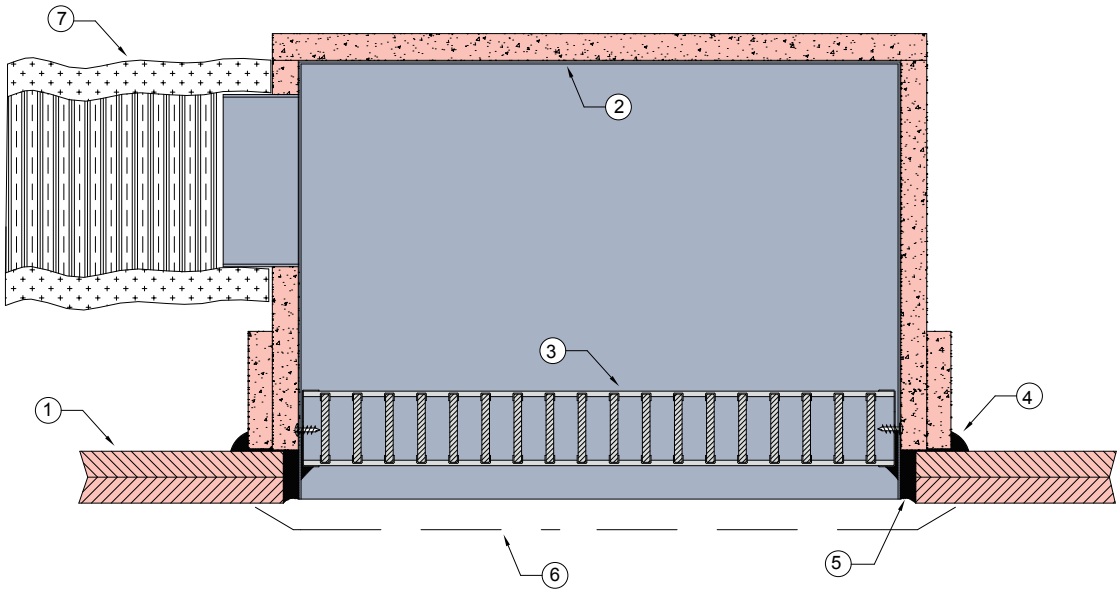

LVH44 installed in ceiling

FRL 60/60/60

Fire Resistance in accordance with

AS1530.4 2014

60 minutes resistance to the incipient spread of flame (RISF)

Approval Ref

BRANZ FAR 4581

Max single cell size

Max area 0.25sqm

INSTALLATION INSTRUCTIONS

- Prepare aperture in ceiling to accept installation.
- Fit supplied plenum box to aperture as detailed.
- Liberally apply Lorient intumescent sealant around aperture and bed box into sealant, as per point 4.
- Seal gap between box and aperture full depth with Lorient intumescent sealant, as per point 5.
- Ensure product identification labels are conspicuously positioned for easy identification.
- Ensure convenient access is provided to allow for AS1851 inspection and maintenance routines.
- Note: Air diffuser and insulated flexible duct supplied by others.

CEILING 2

FIRE & INCIPIENT RATED CEILINGS

	DESCRIPTION
1	2 x layers of 16mm fire rated plasterboard ceiling.
2	Lorient fire rated inline fan connection block.
3	Base plate bedded in Lorient intumescent sealant.
4	Perimeter gap filled full depth with Lorient intumescent sealant.
5	Aluminium return / supply air cover grilles as required.

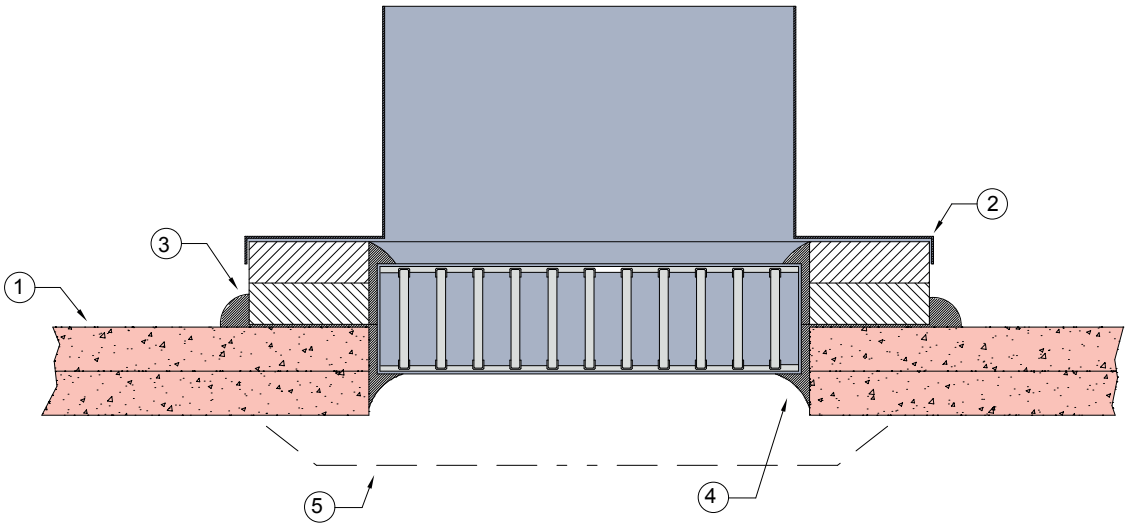

LVH44C installed in ceiling

FRL 60/60/60

Fire Resistance in accordance with

AS1530.4 2014

60 minutes resistance to the incipient spread of flame (RISF)

Approval Ref

BRANZ FP 5859

Max cell size

150mm diameter

INSTALLATION INSTRUCTION

- Determine location and prepare 165mm diameter hole in ceiling.
- Liberally apply Lorient intumescent sealant to the damper baseplate and a 25mm band around the aperture.
- Fit damper centrally within the aperture and push into the intumescent sealant ensuring that is completely bedded in.
- Connect flexible ductwork to casing spigot.
- On the underside of the ceiling seal fill the gap between damper and aperture full depth with Lorient intumescent sealant.
- Fit face cover plate as required.
- Note: Air diffuser / cover plate supplied by others.

INSULATING WALL 1

MASONRY OR CONCRETE WALLS

	DESCRIPTION
1	Masonry or concrete wall with prepared aperture (min. 90mm or thicker).
2	50mm x 50mm x 25mm x 1mm Z275 galvanised steel angle brackets to all four sides fixed to wall with minimum dia 6.5mm x 35mm expanding masonry anchor (e.g dynabolt) at 150mm centres.
3	Angles fixed to damper with 8g x 15mm steel self-drilling screw.
4	Gap between damper and aperture fully filled with Lorient Intumescent sealant.
5	Lorient LVH44 intumescent fire damper.
6	12mm x 24mm galvanised steel wire mesh with min. 1.1mm wire diameter, 75mm projection and 40mm aperture overlap. Wire mesh to be fixed with min. dia 6.5mm x 35mm expanding masonry anchor (eg. dynabolt) and dia 32mm x 1.5mm thick washer. Alternative cover grille: Vermin metal mesh cover grille/ guard to suit aperture

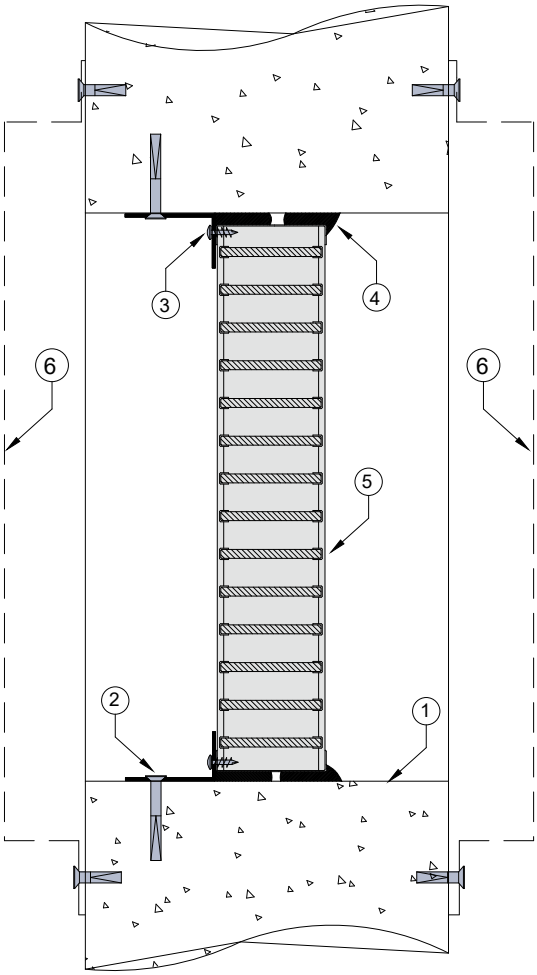

LVH44 Air Transfer Grille

FRL up to -/240/120 (up to 1200mm x 600mm)

FRL up to -/120/120 (up to 2400mm x 1800mm)

Fire Resistance in accordance with

AS1530.4 2014

Approval Ref

EXOVA EWFA 55205900

Max size

2400mm x 1800mm

INSTALLATION INSTRUCTIONS

- Prepare the wall opening to accept the fire damper, as per point 1.
- Mechanically fix angle brackets to aperture with steel anchors, as per point 2.
- Install LVH44 in aperture, and fix to angle brackets with steel self drilling screws as per point 3.
- Firestop the gap between the LVH44 perimeter and wall with Lorient intumescent sealant, note fill details in point 4.
- Ensure product identification labels are conspicuously positioned for easy identification.
- Ensure convenient access is provided to allow for AS1851 inspection and maintenance routines.
- Note: Angles, fixings and wire mesh supplied by others.

NON-INSULATING WALL 2

CSR HEBEL ® POWERPANEL WALL

	DESCRIPTION
1	CSR Hebel Powerpanel wall with prepared aperture: CSR Hebel 75mm Powerpanel (single layer reinforced) for FRL -/90/90 CSR Hebel 75mm Powerpanel (double layer reinforced) for FRL -/120/120 CSR Hebel 100mm Powerpanel+ (double layer reinforced) for FRL -/120/120 CSR Hebel 125mm Powerpanel+ (double layer reinforced) for FRL -/120/120
2	50mm x 50mm x 25mm x 1mm Z275 galvanised steel angle brackets to all four sides fixed to wall with minimum 10g x 50mm coarse thread screw at 150mm centres. For Hebel 75mm Powerpanel: 25mm x appropiate length x 25mm x 1mm "Z" Fixing brackets to all four sides fixed to wall horizontally with No.10-14 Hex head type 17 coarse thread screws - screw length to suit and ensure minimum embedment of 60-65mm at 150mm centres.
3	Angles fixed to damper with 8g x 15mm steel self-drilling screw.
4	Gap between damper and aperture fully-filled with Lorient Intumescent sealant.
5	Lorient LVH44 Intumescent fire damper.
6	12mm x 24mm galvanised steel wire mesh with min. 1.1mm wire diameter, 75mm projection and 40mm aperture overlap.
6A	Alternative approved option: Metal cover guard
7	Hebel wall fixings - 14 gauge timber screw with 10 threads per inch (14-10-Type 17), minimum embedment of 60-65mm with 32mm diameter washer.

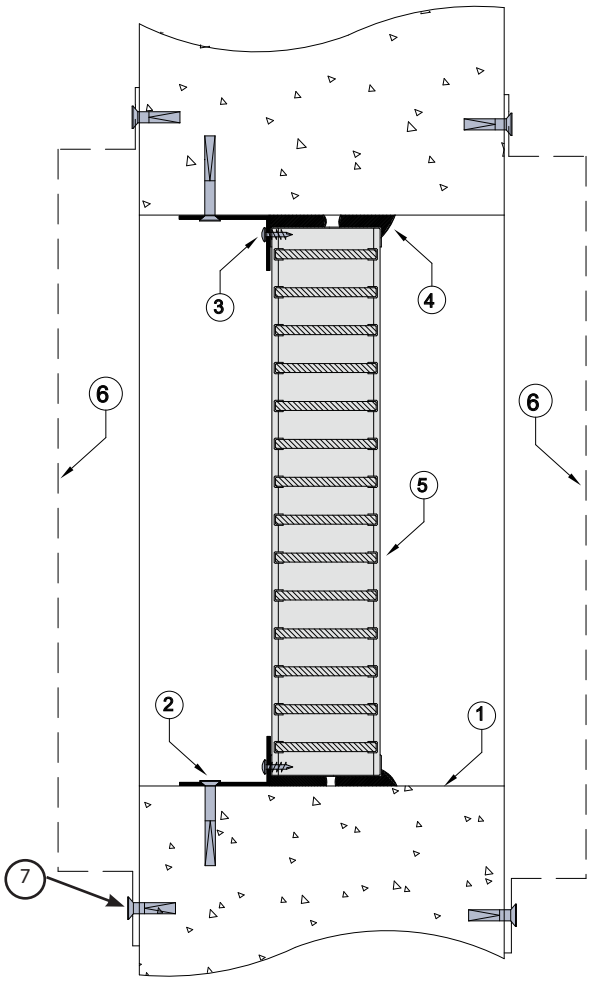

LVH44 Air Transfer Grille

FRL Up to -/120/-

Fire Resistance in accordance with

AS1530.4 2014

Approval Ref

EXOVA EWFA 55205900

Max size

1200mm x 2400mm

INSTALLATION INSTRUCTIONS

- Prepare the wall opening to accept the fire damper, as per point 1.
- Mechanically fix Angle brackets to aperture with steel anchors, as per point 2.
- Install LVH44 in aperture, and fix to angle brackets with steel self drilling screws as per point 3.
- Firestop the gap between the LVH44 perimeter and wall with Lorient intumescent sealant, note fill details in point 4.
- Ensure product identification labels are conspicuously positioned for easy identification.
- Ensure convenient access is provided to allow for AS1851 inspection and maintenance routines.

Note: Angles, fixings and wire mesh supplied by others.

INSULATING WALL 3

CSR HEBEL POWERPANEL WALL

	DESCRIPTION
1	CSR Hebel Powerpanel wall with prepared aperture: CSR Hebel 75mm Powerpanel (single layer reinforced) for FRL -/90/90 CSR Hebel 75mm Powerpanel (double layer reinforced) for FRL -/120/120 CSR Hebel 100mm Powerpanel+ (double layer reinforced) for FRL -/120/120 CSR Hebel 125mm Powerpanel+ (double layer reinforced) for FRL -/120/120
2	50mm x 50mm x 25mm x 1mm Z275 galvanised steel angle brackets to all four sides fixed to wall with minimum 10g x 50mm coarse thread screw at 150mm centres. For Hebel 75mm Powerpanel: 25mm x appropiate length x 25mm x 1mm "Z" Fixing brackets to all four sides fixed to wall horizontally with No.10-14 Hex head type 17 coarse thread screws - screw length to suit and ensure minimum embedment of 60-65mm at 150mm centres.
3	Angles fixed to damper with 8g x 15mm steel self-drilling screw.
4	Gap between damper and aperture fully-filled with Lorient Intumescent sealant.
5	Lorient LVH44 Intumescent fire damper.
6	12mm x 24mm galvanised steel wire mesh with min. 1.1mm wire diameter, 75mm projection and 40mm aperture overlap
6A	Alternative approved option: Metal cover guard
7	Hebel wall fixings - 14 gauge timber screw with 10 threads per inch (14-10-Type 17), minimum embedment of 60-65mm, with 32mm diameter washers.
8	2 layers of 100mm wide x 16mm thick plasterboard support padding fixed with Hebel wall fixings
9	At least 5mm bead of Lorient intumescent sealant.

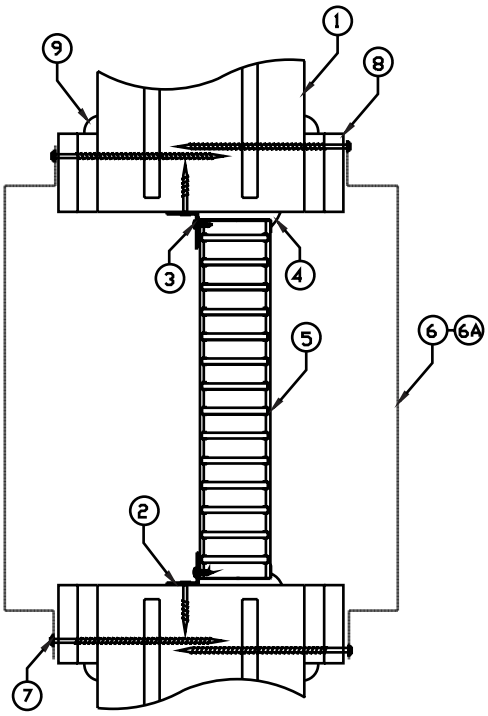

LVH44 Air Transfer Grille

FRL Up to -/120/120

Fire Resistance in accordance with

AS1530.4 2014

Approval Ref

EXOVA EWFA 55205900

Max size

1200mm x 2400mm

INSTALLATION INSTRUCTIONS

- Prepare the wall opening to accept the fire damper, as per point 1.
- Mechanically fix Angle brackets to aperture with steel anchors, as per point 2.
- Install LVH44 in aperture, and fix to angle brackets with steel self drilling screws as per point 3.
- Firestop the gap between the LVH44 perimeter and wall with Lorient intumescent sealant, note fill details in point 4.
- Ensure product identification labels are conspicuously positioned for easy identification.
- Ensure convenient access is provided to allow for AS1851 inspection and maintenance routines.
- Note: Angles and fixings supplied by others.

NON-INSULATING WALL 4 - SPEEDPANEL WALL

MASONRY OR CONCRETE WALLS

	DESCRIPTION
1	51mm, 64mm or 78 Speedpanel wall system. (FRL varies depending on the wall thickness).
2	C track aperture lined out as per Speedpanel approval/installation guideline.
3	50 x 50 x 25 x 1mm Z275 galvanised steel angles brackets to all four sides fixed to wall with steel self-drilling screws (8g x 15mm) at 150mm centres.
4	Angles fixed to damper with steel self-drilling screws (8g x 15mm) at 150mm centres.
5	Gap between damper and aperture fully-filled with Lorient Intumescent sealant.
6	Lorient LVH44 Intumescent fire damper.
7	1.1mm diameter galvanised steel mesh with 75mm projection and 40mm aperture overlap.
7A	Alternative approved option: Metal cover guard.
8	Screw fixings – steel self-drilling screw 10g x 38mm long with 32mm diameter washer.

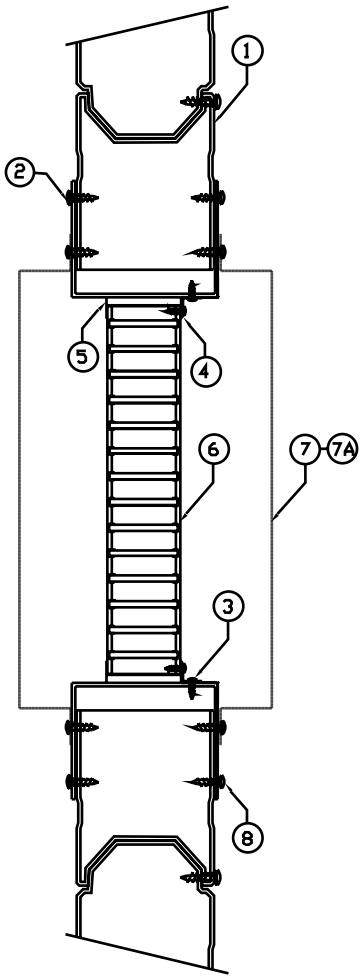

LVH44 Air Transfer Grille

FRL Up to -/120/-

Fire Resistance in accordance with

AS1530.4 2014

Approval Ref

EXOVA EWFA 55205900

Max size

1200mm x 2400mm

INSTALLATION INSTRUCTIONS

- Prepare the wall opening to accept fire damper, as per point 1 & 2.
- Mechanically fix angle brackets to aperture with Speedpanel wall fixings, as per points 3.
- Install LVH44 in aperture, and fix to angle brackets with self-drilling screws as per point 4.
- Firestop the gap between the LVH44 perimeter and wall with Lorient intumescent sealant, note fill details in point 5.
- Mechanically fix steel mesh wire with screws and penny washer, as per point 7 & 8.
- Ensure product identifications labels are conspicuously positioned for easy identification.
- Ensure convenient access is provided to allow for AS1851 inspection and maintenance routines.

Note: Angles and fixings supplied by others.

INSULATING WALL 5

13MM FIRE RATED PLASTERBOARD WALL WITH STEEL/TIMBER STUD

	DESCRIPTION
1	13mm fire rated plasterboard.
2	13mm fire rated plasterboard lining aperture.
3	Steel stud framing out aperture (min. 64mm deep) OrRTimber stud framing aperture (min. 70mm x 35mm).
4	40mm X 40mm X 25mm X 1 mm Z275 Gal steel angles fixed to all four sides of LVH44 and one side of wall at 100mm centres: - Angles to LVH44: Wafer button head screws (6g x 16mm long) - Angles to wall: Bugle head needle point screws (6g x 40mm)
5	Gap between damper and aperture filled with Lorient Intumescent sealant.
6	Lorient LVH44 Intumescent fire damper.
7	24mm x 12mm Galvanised steel mesh with 1.5mm wire thickness: - Fitted over wall opening with 60mm overlap. - Minimum 115 mm distance between LVH44 damper and mesh - Fitted with Bugle head needle point screws (6g x 40mm)and 32mm diameter X 1.5mm thick flat plate washer at 150mm centres.
8	2 layers of 100mm x 16mm plasterboard support pad fitted with plasterboard screws no more than 100mm centres.
9	Plasterboard support pad treatment – 5mm of Lorient intumescent sealant.

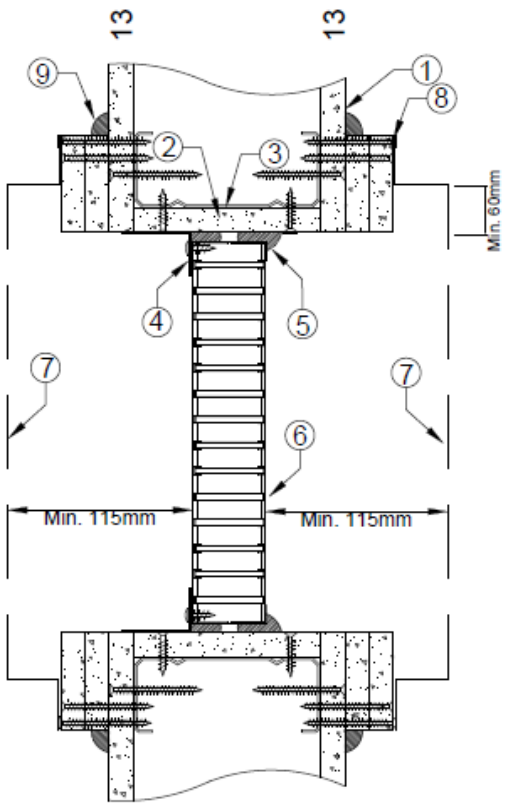

LVH44 Air Transfer Grille in Fire rated Plasterboard wall

Fire Resistance in accordance with

AS1530.4 2014 Up to -/60/60

T Ref

CSIRO FCO-3487

Max size

1200mm x 2400mm

INSTALLATION INSTRUCTIONS

- Prepare the wall opening to accept fire damper, as per point 1
- Mechanically fix angle brackets to aperture with screws, as per points 4.
- Install LVH44 in aperture, and fix to angle brackets with wafer button head screws as per point 4.
- Firestop the gap between the LVH44 perimeter and wall with Lorient intumescent sealant, note fill details in point 5.
- Install plasterboard support pad with plasterboard screws, as per point 8.
- Mechanically fix steel mesh wire with screws and penny washer, as per point 7.
- Ensure product identifications labels are conspicuously positioned for easy identification.
- Ensure convenient access is provided to allow for AS1851 inspection and maintenance routines.

Note: Damper casings, angles and fixings supplied by others.

INSULATING WALL 6

13MM FIRE RATED PLASTERBOARD WALL WITH STEEL/TIMBER STUD

	DESCRIPTION
1	16mm fire rated plasterboard.
2	16mm fire rated plasterboard lining aperture.
3	Steel stud framing out aperture (min. 64mm deep) OR Timber stud framing aperture (min. 70mm x 35mm).
4	40mm X 40mm X 25mm X 1 mm Z275 Gal steel angles fixed to all four sides of LVH44 and one side of wall at 100mm centres: - Angles to LVH44: Wafer button head screws (6g x 16mm Long) - Angles to wall: Bugle head needle point screws (6g x 40mm)
5	Gap between damper and aperture filled with Lorient Intumescent sealant.
6	Lorient LVH44 Intumescent fire damper.
7	24mm x 12mm Galvanised steel mesh with 1.5mm wire thickness: - Fitted over wall opening with 60mm overlap. - Minimum 115 mm distance between LVH44 damper and mesh - Fitted with Bugle head needle point screws (6g x 40mm)and 32mm diameter X 1.5mm thick flat plate washer at 150mm centres.
8	1 layer of 100mm x 16mm plasterboard support pad fitted with plasterboard screws no more than 100mm centres.
9	Plasterboard support pad treatment – 5mm of Lorient intumescent sealant.

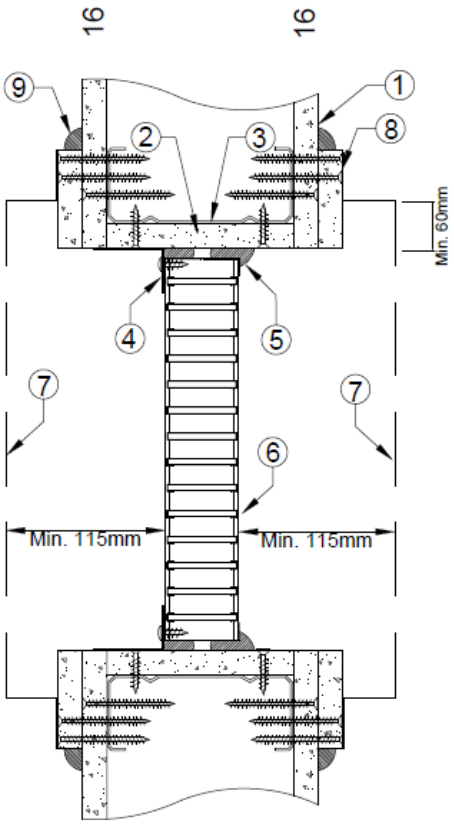

LVH44 Air Transfer Grille in Fire rated Plasterboard wall

Fire Resistance in accordance with

AS1530.4 2014 Up to -/90/90

T Ref

CSIRO FCO-3487

Max size

1200mm x 2400mm

INSTALLATION INSTRUCTIONS

- Prepare the wall opening to accept fire damper, as per point 1
- Mechanically fix angle brackets to aperture with screws, as per points 4.
- Install LVH44 in aperture, and fix to angle brackets with wafer button head screws as per point 4.
- Firestop the gap between the LVH44 perimeter and wall with Lorient intumescent sealant, note fill details in point 5.
- Install plasterboard support pad with plasterboard screws, as per point 8.
- Mechanically fix steel mesh wire with screws and penny washer, as per point 7.
- Ensure product identifications labels are conspicuously positioned for easy identification.
- Ensure convenient access is provided to allow for AS1851 inspection and maintenance routines.

Note: Damper casings, angles and fixings supplied by others.

INSULATING WALL 7

13MM FIRE RATED PLASTERBOARD WALL WITH STEEL/TIMBER STUD

	DESCRIPTION
1A	2 X 13mm fire rated plasterboard
1B	2 X 16mm fire rated plasterboard
2A	2 X 13mm fire rated plasterboard lining aperture
2B	2 X 16mm fire rated plasterboard lining aperture
3	Steel stud framing out aperture (min. 64mm deep) OR Timber stud framing aperture (min. 70mm x 35mm).
4	40mm X 40mm X 25mm X 1 mm Z275 Gal steel angles fixed to all four sides of LVH44 and one side of wall at 100mm centres: - Angles to LVH44: Wafer button head screws (6g x 16mm long) - Angles to wall: Bugle head needle point screws (6g x 40mm)
5	Gap between damper and aperture filled with Lorient Intumescent sealant.
6	Lorient LVH44 Intumescent fire damper.
7	24mm x 12mm Galvanised steel mesh with 1.5mm wire thickness: - Fitted over wall opening with 60mm overlap. - Minimum 115 mm distance between LVH44 damper and mesh - Fitted with Bugle head needle point screws (6g x 40mm)and 32mm diameter X 1.5mm thick flat plate washer at 150mm centres.
8	1 layer of 100mm x 16mm plasterboard support pad fitted with plasterboard screws no more than 100mm centres.
9	Plasterboard support pad treatment – 5mm of Lorient intumescent sealant.

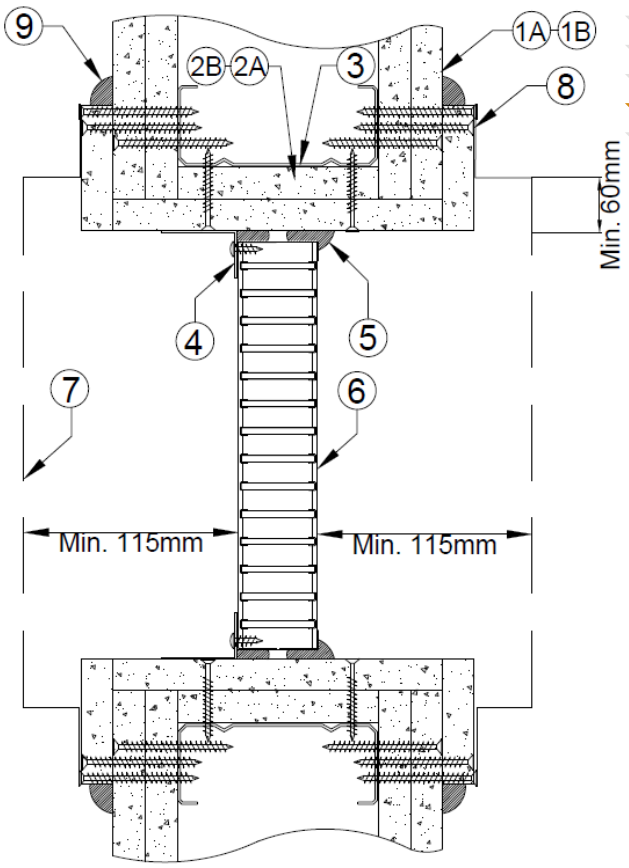

FIRE RATED AIR TRANSFER GRILLES

LVH44 Air Transfer Grille in Fire rated Plasterboard wall

Fire Resistance in accordance with

AS1530.4 2014 Up to -/120/120

T Ref

CSIRO FCO-3487

Max size

1200mm x 2400mm

INSTALLATION INSTRUCTIONS

- Prepare the wall opening to accept fire damper, as per point 1A or 1B.
- Mechanically fix angle brackets to aperture with screws, as per points 4.
- Install LVH44 in aperture, and fix to angle brackets with wafer button head screws as per point 4.
- Firestop the gap between the LVH44 perimeter and wall with Lorient intumescent sealant, note fill details in point 5.
- Install plasterboard support pad with plasterboard screws, as per point 8.
- Mechanically fix steel mesh wire with screws and penny washer, as per point 7.
- Ensure product identifications labels are conspicuously positioned for easy identification.
- Ensure convenient access is provided to allow for AS1851 inspection and maintenance routines.

Note: Damper casings, angles and fixings supplied by others.

FIRE DOOR 1

E-CORE® FIRE DOORS

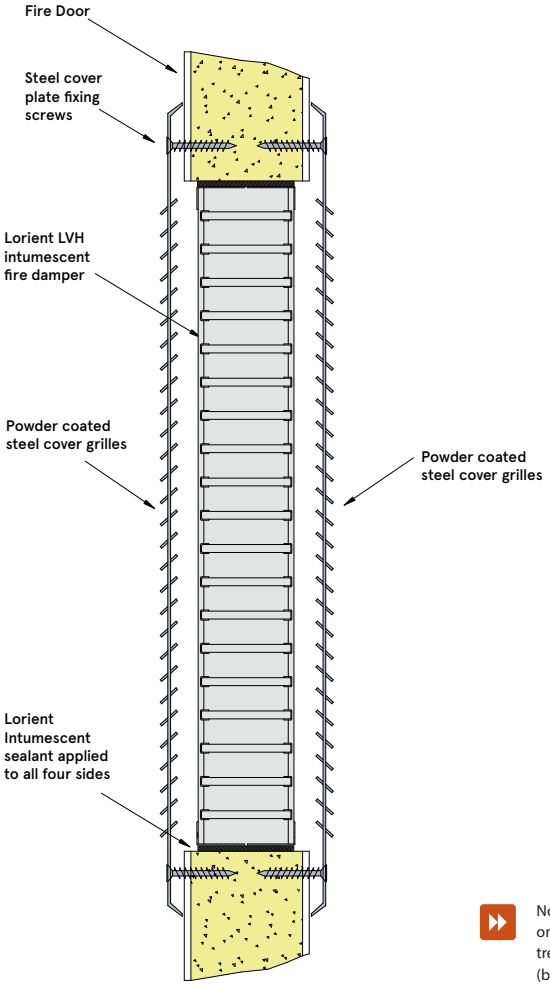

Note: Cover grilles are designed for internal use only. If intended for exterior use they must be treated with an appropriate weather proof finish (by others).

LVH-Door grille installed in E-core® fire door assemblies

FRL Up to -/120/30

Fire Resistance in accordance with

AS1530.4 2014

Approval Ref

EXOVA FAS240056

Approved sizes

600mm x 600mm
300mm x 300mm

INSTALLATION INSTRUCTIONS

- Identify fire door type and check manufacturer's approvals to ensure that cutting an aperture in the door will not detract from the integrity of the door leaf.
- Establish the number of allowable openings, their maximum size and if there are any positioning limitations.
- Carefully cut the aperture to the required size allowing an additional 5mm clearance to all sides (for application of intumescent sealant).
- Ensure aperture is square and true and position the damper into the cut-out so perimeter gaps between the aperture and damper are even.
- Apply Lorient intumescent sealant to both sides, making sure the perimeter gap is completely filled.
- Position pressed steel cover grilles centrally over the damper and fix to the door leaf using supplied screws (8g x 25mm Pan Head self-tapping screw).
- Fire door grille kit product code:
  LVHFDK/600X300/SIL
  LVHFDK/300X300/SIL

FIRE DOOR 2

FIRECORE® FIRE DOORS

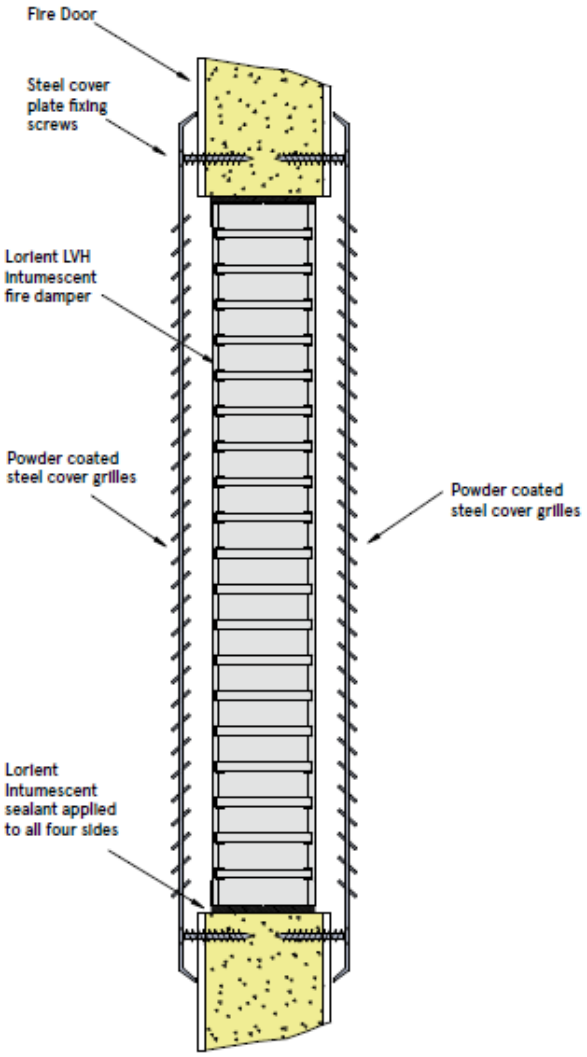

Note: Cover grilles are designed for internal use only. If intended for exterior use they must be treated with an appropriate weather proof finish (by others).

LVH-Door grille installed in Firecore® fire door assemblies

FRL Up to -/240/30

Fire Resistance in accordance with

AS1530.4 2014

Approval Ref

CSIRO FCO 3457

Approved sizes

600mm x 600mm* (up to -/180/30)
600mm x 300mm
450mm x 450mm
300mm x 300mm

INSTALLATION INSTRUCTIONS

- Identify fire door type and check manufacturer's approvals to ensure that cutting an aperture in the door will not detract from the integrity of the door leaf.
- Establish the number of allowable openings, their maximum size and if there are any positioning limitations.
- Carefully cut the aperture to the required size allowing an additional 5mm clearance to all sides (for application of intumescent sealant).
- Ensure aperture is square and true and position the damper into the cut-out so perimeter gaps between the aperture and damper are even.
- Apply Lorient intumescent sealant to both sides, making sure the perimeter gap is completely filled.
- Position pressed steel cover grilles centrally over the damper and fix to the door leaf using supplied screws.
- Fire Door Grille Kit Product Code:
  LVHFDK/600X600/SIL
  LVHFDK/600X300/SIL
  LVHFDK/450X450/SIL
  LVHFDK/300X300/SIL

- Grilles to be installed at a minimum 150mm from the bottom and top edge, 110mm from the side edge of the door leaf
- Maximum of 2 door grilles allowed

Please contact Firecore technical department for more information

FIRE DOOR 3

PYROPANEL® FIRE DOORS

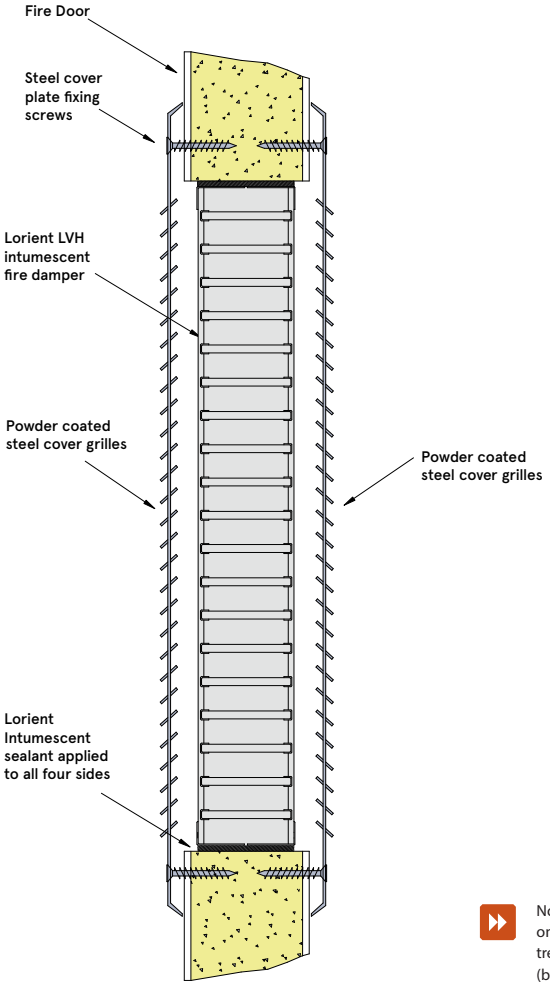

Note: Cover grilles are designed for internal use only. If intended for exterior use they must be treated with an appropriate weather proof finish (by others).

LVH-Door grille installed in Pyropanel® fire door assemblies

FRL Up to -/120/30

Fire Resistance in accordance with

AS1530.4 2014

Approval Ref

EXOVA EWFA 27704400

Approved sizes

600mm x 600mm
600mm x 300mm*
450mm x 450mm*
300mm x 300mm*

* Multiple door grilles allowed - overall area covered by door grille must not exceed 0.66 m^2

- Grilles to be installed at a minimum 500mm from the bottom, 138mm from the sides and 300mm from teh top of door set.

INSTALLATION INSTRUCTIONS

- Identify fire door type and check manufacturer's approvals to ensure that cutting an aperture in the door will not detract from the integrity of the door leaf.
- Establish the number of allowable openings, their maximum size and if there are any positioning limitations.
- Carefully cut the aperture to the required size allowing an additional 5mm clearance to all sides (for application of intumescent sealant).
- Ensure aperture is square and true and position the damper into the cut-out so perimeter gaps between the aperture and damper are even.
- Apply Lorient intumescent sealant to both sides, making sure the perimeter gap is completely filled.
- Position pressed steel cover grilles centrally over the damper and fix to the door leaf using supplied screws (8g x 25mm Pan Head self-tapping screw).
- Fire door grille kit product code:

  LVHFDK/600X600/SIL
  LVHFDK/600X300/SIL
  LVHFDK/450X450/SIL
  LVHFDK/300X300/SIL

NOTES